Acer AL1713

Service Guide

Conventions

The following conventions are used in this manual

Screen Messages	Denotes actual messages that appear on screen
NOTE	Give bits and pieces of additional information related to the current topic.
WARNING	Alerts you to any damage that might result from doing or not doing specific actions.
CAUTION	Gives precautionary measures to avoid possible hardware or software problems.
IMPORTANT	Reminds you to do specific actions relevant to the accomplishments of procedures.

Preface

Before using this information and the product it supports, please read the following general information.

1. This Service Guide provides you with all technical information relating to the BASIC CONFIGURATION decided for Acer's "global" product offering. To better fit local market requirements and enhance product competitiveness, your regional office MAY have decided to extend the functionality of a machine (e.g. add-on card, modem, or extra memory capability). These LOCALIZED FEATURES will NOT be covered in this generic service guide. In such cased, please contact your regional offices or the responsible personnel/channel to provide you with further technical details.
2. Please not WHEN ORDER FRU PARTS, that you should check the most up-to-date information available on your regional web or channel. If, for whatever reason, a part number change is made, it will not be noted in the printed Service Guide. For ACER-AUTHORIZED SERVICE PROVIEDERS, your Acer office may have a DIFFERENT part number code to those given in the FRU list of this printed Service Guide. You MUST use the list provided by your regional Acer office to order FRU parts for repair and service of customer machines.

WARNING (FOR FCC CERTIFIED MODELS)

NOTE: This equipment has been tested and found to comply with the limits for a Class B digital device, pursuant to Part 15 of the FCC Rules. These limits are designed to provide reasonable protection against harmful interference in a residential installation. This equipment generates uses and can radiate radio frequency energy, and if not installed and used in accordance with the instructions, may cause harmful interference to radio communications. However, there is no guarantee that interference will not occur in a particular installation. If this equipment does cause harmful interference to radio or television reception, which can be determined by turning the equipment off and on, the user is encouraged to try to correct the interference by one or more of the following measures:

1. Reorient or relocate the receiving antenna.
2. Increase the separation between the equipment and receiver.
3. Connect the equipment into an outlet on a circuit different from that to which the receiver is connected.
4. Consult the dealer or an experienced radio/TV technician for help.

Notice:

1. The changes or modifications not expressly approved by the party responsible for compliance could void the user's authority to operate the equipment.
2. Shielded interface cables and AC power cord, if any, must be used in order to comply with the emission limits.
3. The manufacturer is not responsible for any radio or TV interference caused by unauthorized modification to this equipment. It is the responsibility of the user to correct such interference.

As an ENERGY STAR Partner our company has determined that this product meets the ENERGY STAR guidelines for energy efficiency.

WARNING:

To prevent fire or shock hazard, do not expose the monitor to rain or moisture. Dangerously high voltages are present inside the monitor. Do not open the cabinet. Refer servicing to qualified personnel only.

PRECAUTIONS

- Do not use the monitor near water, e.g. near a bathtub, washbowl, kitchen sink, laundry tub, swimming pool or in a wet basement.
- Do not place the monitor on an unstable trolley, stand, or table. If the monitor falls, it can injure a person and cause serious damage to the appliance. User only a trolley or stand recommended by the manufacturer or sold with the monitor. If you mount the monitor on a wall or shelf, use a mounting kit approved by the manufacturer and following the kit instructions.
- Slots and openings in the back and bottom of the cabinet are provide for ventilation. To ensure reliable operation of the monitor and to protect it from overheating, be sure these openings are not blocked or covered. Do not place the monitor on a bed, sofa, rug, or similar surface. Do not place the monitor near or over a radiator or heat register. Do not place the monitor in a bookcase or cabinet unless proper ventilation is provided.
- The monitor should be operated only from the type of power source indicated on the label. If you are not sure of the type of power supplied to your home, consult your dealer or local power company.
- The monitor is equipped with a three-pronged grounded plug, a plug with a third (grounding) pin. This plug will fit only into a grounded power outlet as a safety feature. If your outlet does not accommodate the three-wire plug, have an electrician install the correct outlet, or use an adapter to ground the appliance safely. Do not defeat the safety purpose of the grounded plug.
- Unplug the unit during a lightning storm or when it will not be used for long periods of time. This will protect the monitor from damage due to power surges.
- Do not overload power strips and extension cords. Overloading can result in fire or electric shock.
- Never push any object into the slot on the monitor cabinet. It could short circuit parts causing a fire or electric shock. Never spill liquids on the monitor.
- Do not attempt to service the monitor yourself; opening or removing covers can expose you to dangerous voltages and other hazards. Please refer all servicing to qualified service personnel.
- To ensure satisfactory operation, use the monitor only with UL listed computers which have appropriate configured receptacles marked between 100-240V AC, Min. 3.5A.
- The wall socket shall be installed near the equipment and shall be easily accessible.

SPECIAL NOTES ON LCD MONITORS

The following symptoms are normal with LCD monitor and do not indicated a problem.

NOTES

- Due to the nature of the fluorescent light, the screen may flicker during initial use. Turn off the Power Switch and then turn it on again to make sure the flicker disappears.
- You may find slightly uneven brightness on the screen depending on the desktop pattern you use.
- The LCD screen has effective pixels of 99.99% or more. It may include blemishes of 0.01% or less such as a missing pixel or a pixel lit all of the time.
- Due to the nature of the LCD screen, an afterimage of the previous screen may remain after switching the image, when the same image is displayed for hours. In this case, the screen is recovered slowly by changing the image or turning off the Power Switch for hours.

Table of Contents

Monitor Features 7

FACTORY PRESET TIMING TABLE 8

Monitor Block Diagram 9

MAIN BOARD DIAGRAM 10

Software Flow Chart 11

MONITOR INTERFACE BOARD PCB LAYOUT 12

FRONT BEZEL 14

BACK VIEW 15

OPERATION INSTRUCTIONS 16

ADJUSTING THE MONITOR 18

MACHINE ASSEMBLY 22

TROUTROUBLESHOOTING 26

FRU (Field Replaceable Unit) LIST 33

SHEMATIC DIAGRAM 38

Chapter 1

Monitor Features

	Driving System	TFT Color LCD
LCD Panel	Size	43.3cm (17.0”)
	Pixel pitch	0.264mm (H) x 0.264mm (V)
	Viewable angle	140 ° (H), 130 ° (V)
	Brightness	300cd/m^2 (typ.)
	Contrast Ratio	450:1 (typ.)
	Response Time	25ms (typ.)
Signal	Video	RGB Analog Interface (Analog only model)
	Separate Sync.	H/V TTL
	H-Frequency	31.5KHz to 85KHz
	V-Frequency	56Hz to 75Hz
Display Color		6bits+FRC
Max Pixel Clock		135MHz
Max. Resolution		1280 x 1024 @75Hz
Plug & Play		VESA DDC 1/2B
EPA ENGERGY STAR	ON MODE	≤ 36W
	OFF MODE	<5W
Audio Output		Rated Power 2.0W rms/channel
Input Connector		D-Sub 15pin Three-Pronged Pin
Input Video Signal		Analog: 0.7Vp-p (Standard), 75 OHM, Positive (Analog-Only Model)
Maximum Screen Size	Horizontal	337.920mm
	Vertical	270.336mm
Power Source		100~240VAC, 50~60Hz
Environmental Considerations		Operating Temp: 5℃ to 35℃ Storage Temp: -20℃ to 60℃ Operating Humidity: 5% to 95%
Weight (Net)		5.6kg
Dimension (W X H X D)		379 x 389 x 159.5 (mm)

External Controls	Switch	● Power Switch ● Menu ● > ● < ● Auto/Exit
	Function	● Contrast/Brightness ● Phase/Clock ● H. Position/ V. Position ● Color (Warm, Cool, User) ● Language ● OSD (H. Position, V. Position, Timeout) ● Auto Config ● Information ● Reset ● Exit
Regulatory Compliance		UL, CSA, TUS+GS, CG, PSB, B-MARK, PSE, Ergo, FCC, BSMI, VCCI, C-Tick, TCO99, CCC, WHQL

FACTORY PRESET TIMING TABLE

Standard	Resolution	Horizontal Frequency (KHz)	Vertical Frequency (Hz)
VGA	640 x 480	31.469	60.000
	640 x 480	37.861	72.809
	640 x 480	37.500	75.000
SVGA	800 x 600	35.156	56.250
	800 x 600	37.879	60.317
	800 x 600	48.077	72.188
	800 x 600	46.875	75.000
XGA	1024 x 768	48.363	60.004
	1024 x 768	56.476	70.069
	1024 x 768	60.023	75.029
SXGA	1280 x 1024	63.981	60.020
	1280 x 1024	79.976	75.025
IBM	640 x 350	31.469	70.087
	720 x 400	31.470	70.080
MAC	832 x 624	49.725	74.551
	1024 x 768	48.780	60.001
	1024 x 768	60.241	74.927

Monitor Block Diagram

The LCD Monitor contains an interface board, and inverter/power board, keypad board and flat panel.

In Inverter/power board, power section supplies +12V & +5V for Inverter and Interface board used. The inverter section drives the backlight of panel and the DC-DC conversion.

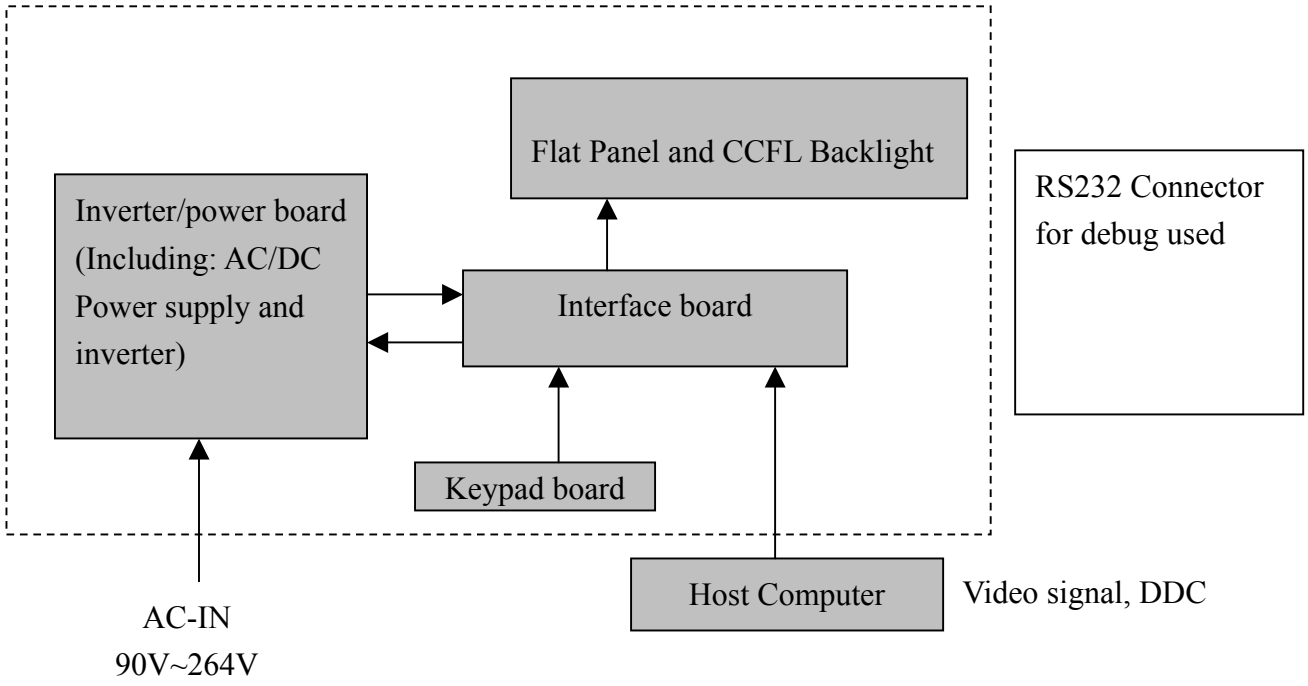

MAIN BOARD DIAGRAM

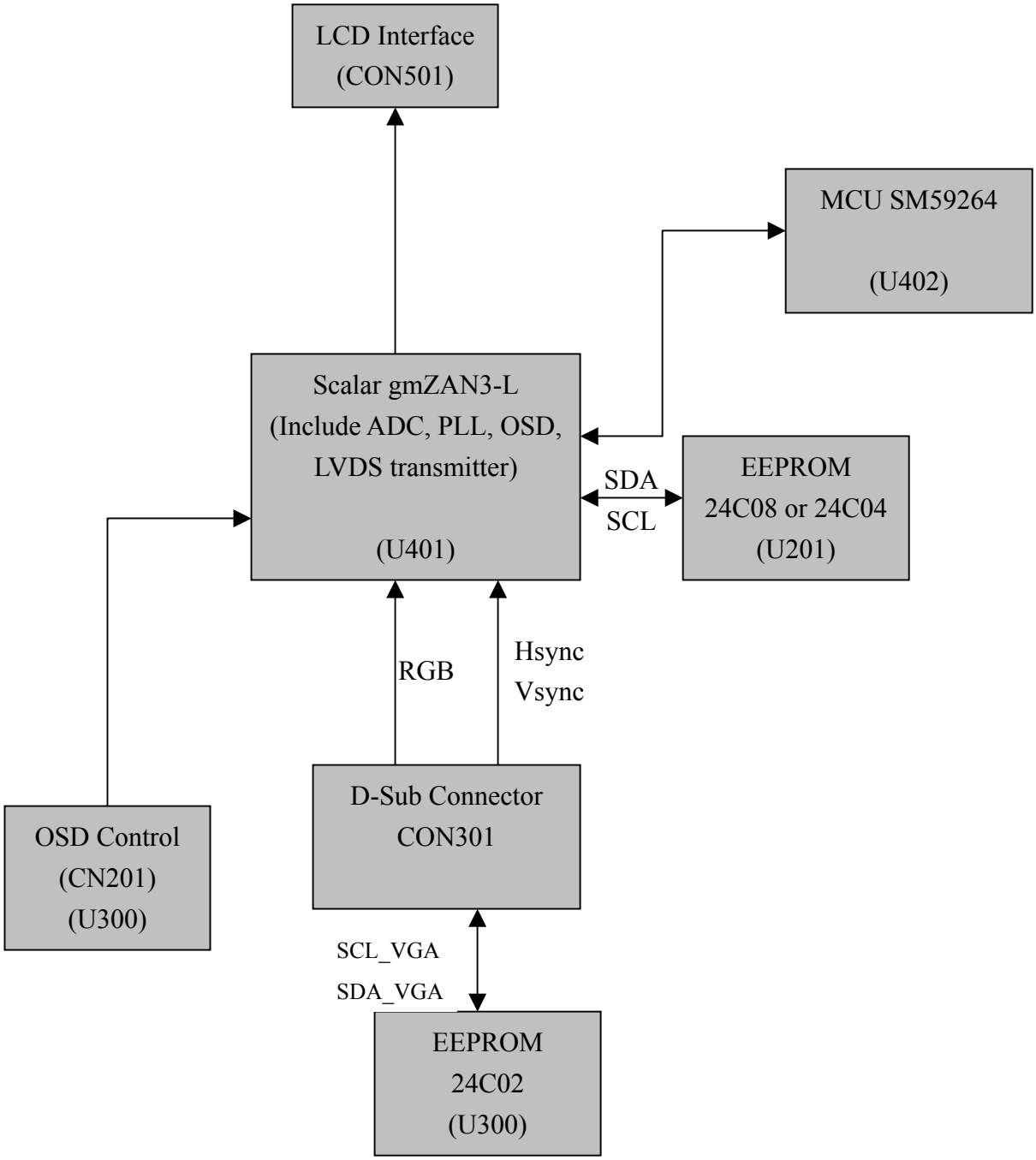

Software Flow Chart

ACER 17” flow chart item description:

1. MCU initialize.
2. Is the EEProm blank?
3. Program the EEProm by default values.
4. Get the user value and mode setting from EEProm.
5. Are the factory key pressed?
6. Enter factory mode.
7. Check the analog port, are there any signal coming?
8. Display “No Signal” message.
9. Enter sleep mode.
10. Wake up the scalar.
11. Program the scalar to be able to show the coming mode.
12. Turn on the LED and set it to green color.
13. Process the OSD display
14. Read the keyboard. Is any key pressed?

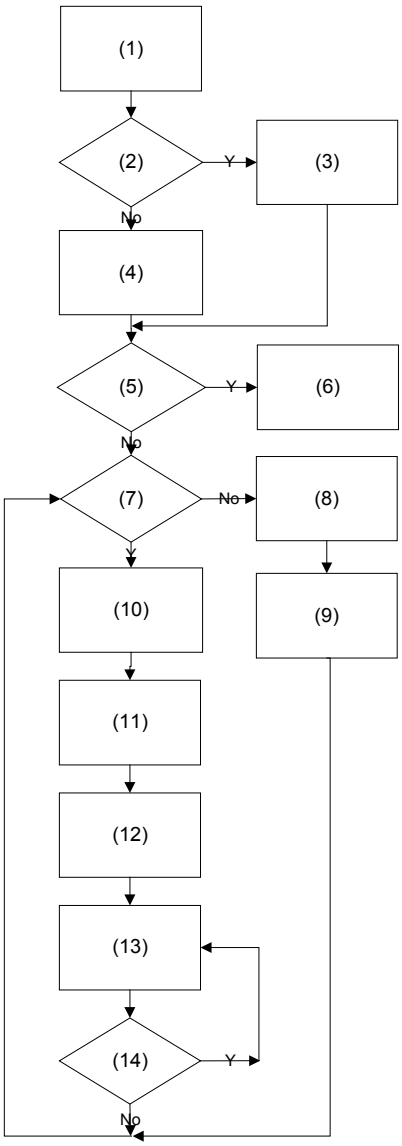

MONITOR INTERFACE BOARD PCB LAYOUT

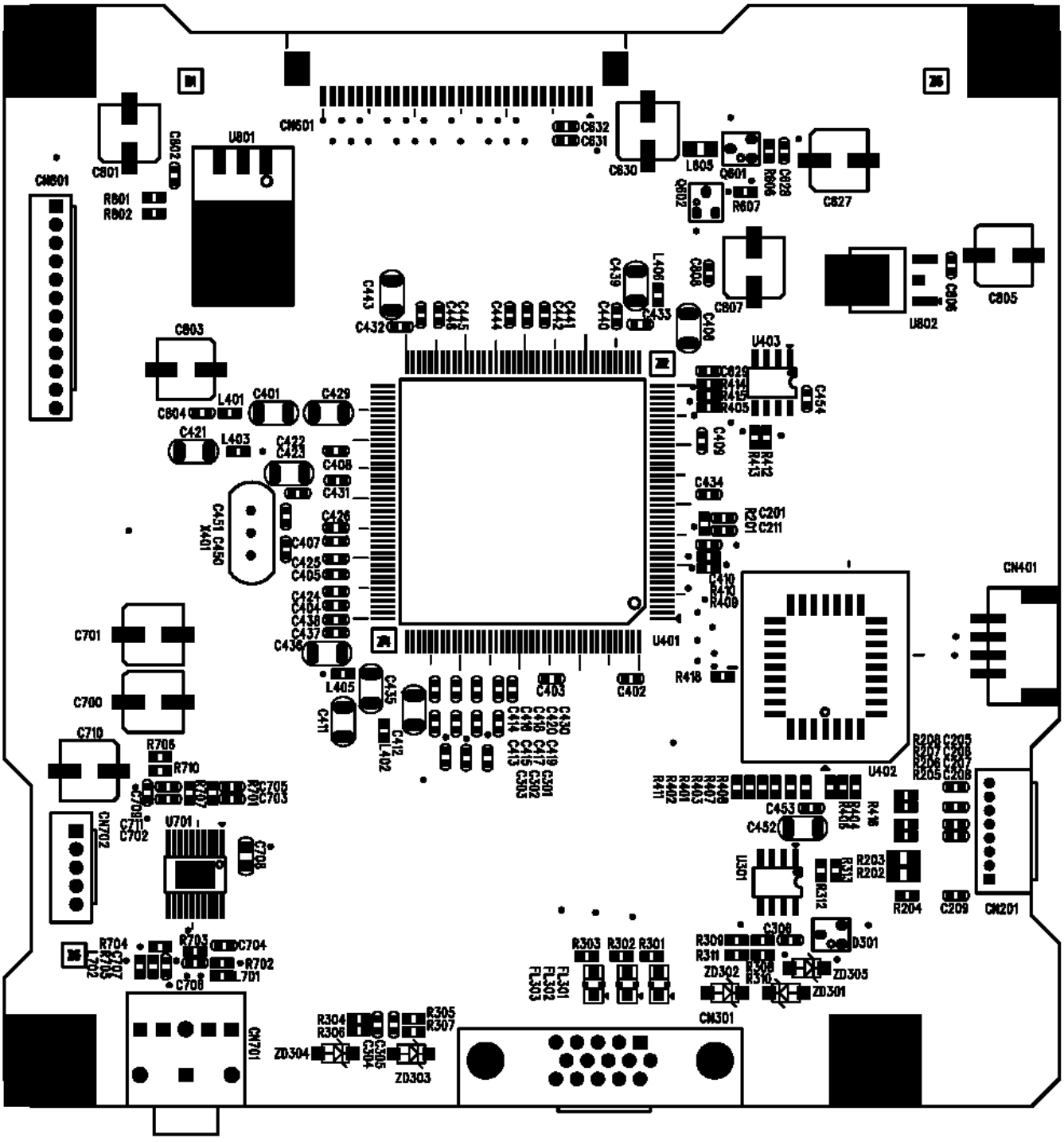

Symbol	Component
U301	S524A40X21/BR24C02F-WE2/AT24C02/HT24LC02
U401	gm2121 (SMD PQFP208)
U402	Flash Memory 1M W39F010-70/A290011TL-70/S29C51001T-90J
U403	EEPROM S524A60X81/HT24LC04
U701	Audio AMP IC LM4843MH
U801	Regulator SMD TO-263 AP1086K33A/LM1117S3.3/FAN1086M33X
U802	Regulator SMD TO-252 SP1117D25A/LM1117DT-2.5
X401	Crystal 14.318MHz
CN201	S8B-ZR (connect I/F and keypad)
CN301	D-SUB 15PIN connector
CN401	S4BPH-J
CN601	Pitch 1mm FPC connector FPC1S30T11R01
CN701	Audio Jack ST-413-06
CN702	B5B-PH-K (Audio control)
CN801	B12B-PH-K

FRONT BEZEL

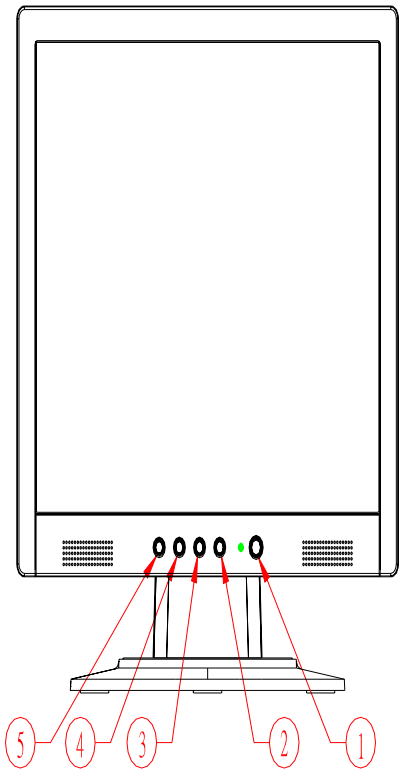

ITEM	DESCRIPTION
1	Power Tack Switch
2	Menu/Enter
3	> (Up)
4	< (Down)
5	Auto/Exit

BACK VIEW

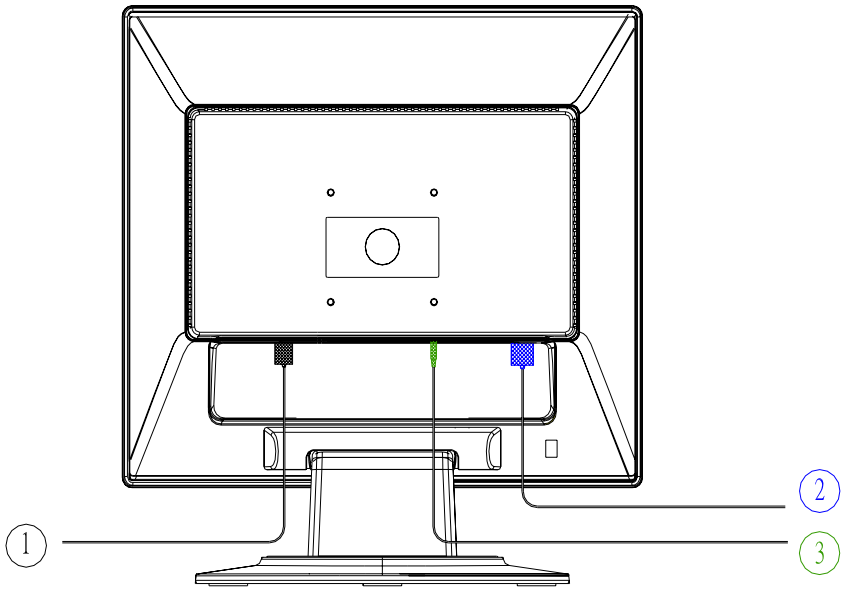

ITEM	DESCRIPTION
1	Three-pronged power cord
2	VGA Cable with blue connector compliance with PC99
3	Audio cable

Chapter 2

OPERATION INSTRUCTIONS

Press the power button to turn the monitor on or off. The other control buttons are located on the front of the monitor. By changing these settings, the picture can be adjusted to your personal preferences.

- The power cord should be connected.
- Connect the video cable from the monitor to the VGA Card.
- Press the power button to turn on the monitor, the power indicator will light up.

Front Panel Control

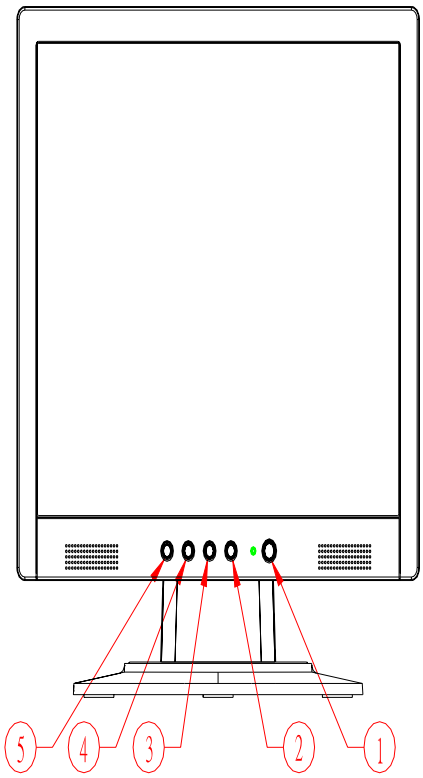

No	Symbol	Function
1	Power key/LED	Press this button to turn the monitor on or off LED Green – Power On mode LED Orange – Off mode
2	Menu/Enter	Activate OSD menu when OSD is off or activate/de-activate adjustment function when OSD is ON or Exit OSD menu when in Volume Adjust OSD status.
3	>	1. Activates the volume control when the OSD is OFF. 2. Navigate through adjustments icons when OSD is ON. 3. Adjust a function when function is activated.
4	<	1. Activates the volume control when the OSD is OFF. 2. Navigate through adjustments icons when OSD is ON. 3. Adjust a function when function is activated.
5	Auto/Exit	1. When OSD menu is in active status, this button will act as EXIT (exit OSD menu) 2. When OSD menu is in off status, press this button for 2seconds to activate the “Auto Adjustment” which is used to set the H.Pos., V Pos., Clock and Phase.

NOTES

- Do not install the monitor in a location near heat sources such as radiators or air ducts, or in a place subject to direct sunlight, or excessive dust or mechanical vibration or shock.
- Save the original shipping carton and packing materials, as they will come in handy if you ever have to ship your monitor.
- For maximum protection, repackage your monitor as it was originally packed in the factory.
- To keep the monitor looking new, periodically clean it with a soft cloth. Stubborn stains may be removed with a cloth lightly dampened with a mild detergent solution. Never use strong solvents such as thinner, benzene, or abrasive cleaners, since these will damage the cabinet. As a safety precaution, always unplug the monitor before cleaning it.

ADJUSTING THE MONITOR

1.) Main OSD Menu

a. Outline

b. Description for OSD

Main Menu Icon	Sub Menu Item	Sub Menu Icon	Description	Adjustment Range	Reset Value
	Contrast		Contrast from digital register	0-100	50
	Brightness		Backlight Adjustment	0-100	100
	Phase		Adjust picture phase to reduce horizontal line noise	0-100	Do auto config
	Clock		Adjust picture clock to reduce vertical line noise	0-100	Do Auto Config
	H. Position		Adjust picture horizontal position	0-100	Do Auto Config
	V. Position		Adjust picture vertical position	0-100	Do Auto Config

	Warm	N/A	Recall warm color temp. from EEPROM	N/A	N/A
	Cool	N/A	Recall cool color temp. from EEPROM	N/A	N/A
	User/Red		Red gain from digital register	0-100	The value which we get after executing Auto color balance
	User/Green		Green gain from digital register	0-100	
	User/Blue		Blue gain from digital register	0-100	
	English	N/A	Set OSD language to English	N/A	English
	繁體中文	N/A	Set OSD language to Traditional Chinese	N/A	
	Deutsch	N/A	Set OSD language to German	N/A	
	Francais	N/A	Set OSD language to French	N/A	
	Espanol	N/A	Set OSD language to Spain	N/A	
	Italiano	N/A	Set OSD language to Italian	N/A	
	簡體中文	N/A	Set OSD Language to Simplified Chinese	N/A	
	日本語	N/A	Set OSD language to Japanese	N/A	
	H. Position		Adjust OSD horizontal position	0-100	50
	V. Position		Adjust OSD vertical position	0-100	50
	OSD Timeout		Adjust the OSD timeout	0-100	40
	Auto Config	N/A	Auto adjust the picture's H/V position, clock and phase	N/A	N/A
	Information	N/A	Show the current input timing mode's resolution, H/V frequency	N/A	N/A
	Reset	N/A	Memory Recall	N/A	N/A
	Exit	N/A	Exit OSD	N/A	N/A

2) HOT-KEY MENU

a. Outline

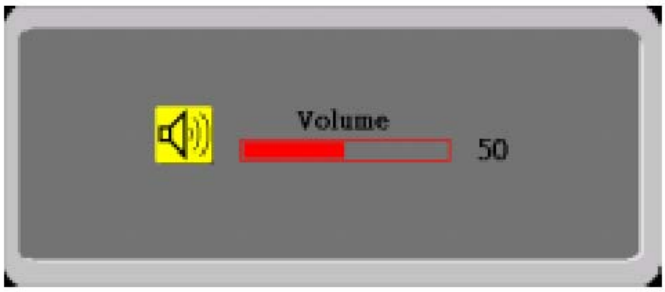

b. Hot key Description

Item	Operation	Icon	Description	Adjustment Range	Reset Value
Audio	When the OSD is closed, press left or right button will be volume Hot-key Function		Audio volume adjustment. The audio will be Mute when audio is set to 0.	0-100	50

3) OSD MESSAGE

a. Outline

b. OSD Message Description

Item	Description
No Signal	When LCD Monitor power on, but video cable is not connected, will show this message, then enter power saving.

HOW TO OPTIMIZE THE DOS-MODE

PLUG AND PLAY

Plug & Play DDC1/2B Feature

This monitor is equipped with VESA DDC1/2B capabilities according to the VESA DDC STANDARD. It allows the monitor to inform the host system its identity and, depending on the level of DDC used, communicate additional information about its display capabilities. The communication channel is defined in two levels, DDC1 and DDC2B.

The DDC1 is a unidirectional data channel from the display to the host that continuously transmits EDID information. The DDC2B is a bidirectional data channel based on the I^2C protocol. The host can request EDID information over the DDC2B channel.

THIS MONITO WILL APPEAR TO BE NON-FUNCTIONAL IF THERE IS NO VIDEO INPUT SIGNAL. IN ORDER FOR THIS MONITOR OT OPERATE PROPERLY, THERE MUST BE A VIDEO INPUT SIGNAL.

This monitor meets the Green monitor standards as set by the Video Electronics Standards Association (VESA) and/or the United States Environmental Protection Agency (EPA) and the Swedish Confederation Employees (NUTEK). This feature is designed to conserve electrical energy by reducing power consumption when there is no video-input signal present. When there is no video input signal this monitor, following a time-out period, will automatically switch to an OFF mode. This reduces the monitor's internal power supply consumption. After the video input signal is restored, full power is restored and the display is automatically redrawn. The appearance is similar to a "Screen Saver" feature except the display is completely off. The display is restored by pressing a key on the keyboard, or clicking the mouse.

USING RIGHT POWER CORD

The accessory power cord for the Northern American region is the wallet plug with NEMA 5*15 style and is UL listed and CSA labeled. The voltage rating for the power cord shall be 125 volts AC.

MACHINE ASSEMBLY

Chapter 3

This chapter contains step-by-step procedures on how to assemble the monitor for maintenance and troubleshooting.

NOTE:

1. The screws for the different components vary in size. During the disassembly process, collect the screws with the corresponding components to avoid mismatch when putting back the components.
2. The monitor surface is susceptible to scratching! Therefore, lay the monitor on a soft surface when mounting or removing the base.
3. Wear gloves

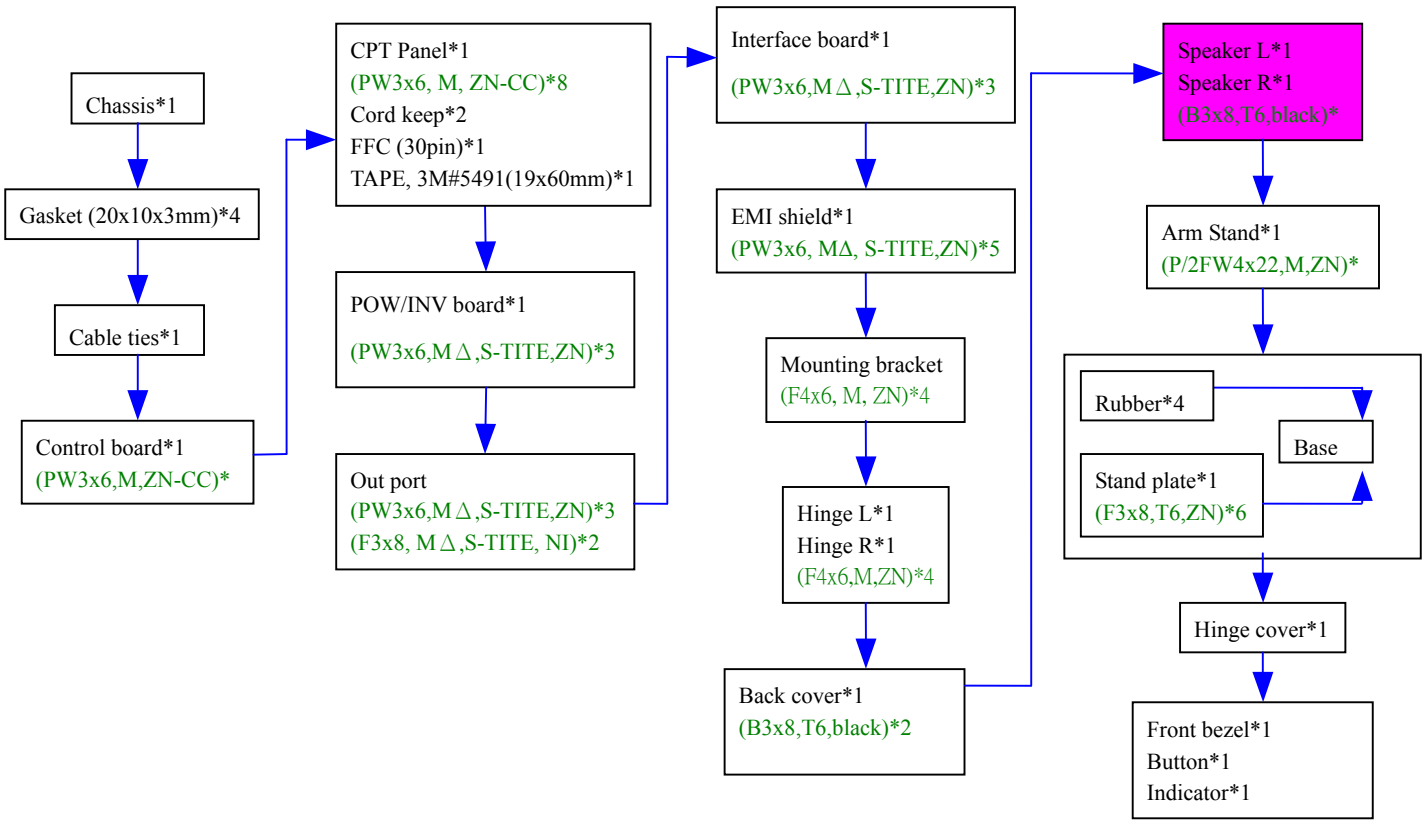

Chassis*1

Gasket(20x10x3mm)*4

Cable ties*1

Control board*1
(PW3x6,M,ZN-CC)*2

CPT Panel*1
(PW3x6,M,ZN-CC)*8
Cord keep*2
FFC(30pin)*1
TAPE,3M#5491(19x60mm)*1

POW/INV board*1
(PW3x6,MΔ,S-TITE,ZN)*3
(B/BW4x6,M,ZN)*2

Out port
(PW3x6,MΔ,S-TITE,ZN)*3
(F3x8, MΔ,S-TITE, NI)*2

Interface board*1
(PW3x6,MΔ,S-TITE,ZN)*3
(Bolt，#4-40，NI)*2

EMI shield*1
(PW3x6,MΔ,S-TITE,ZN)*5

Mounting bracket
(F4x6,M,ZN)*4

Hinge L*1
Hinge R*1
(F4x6,M,ZN)*4

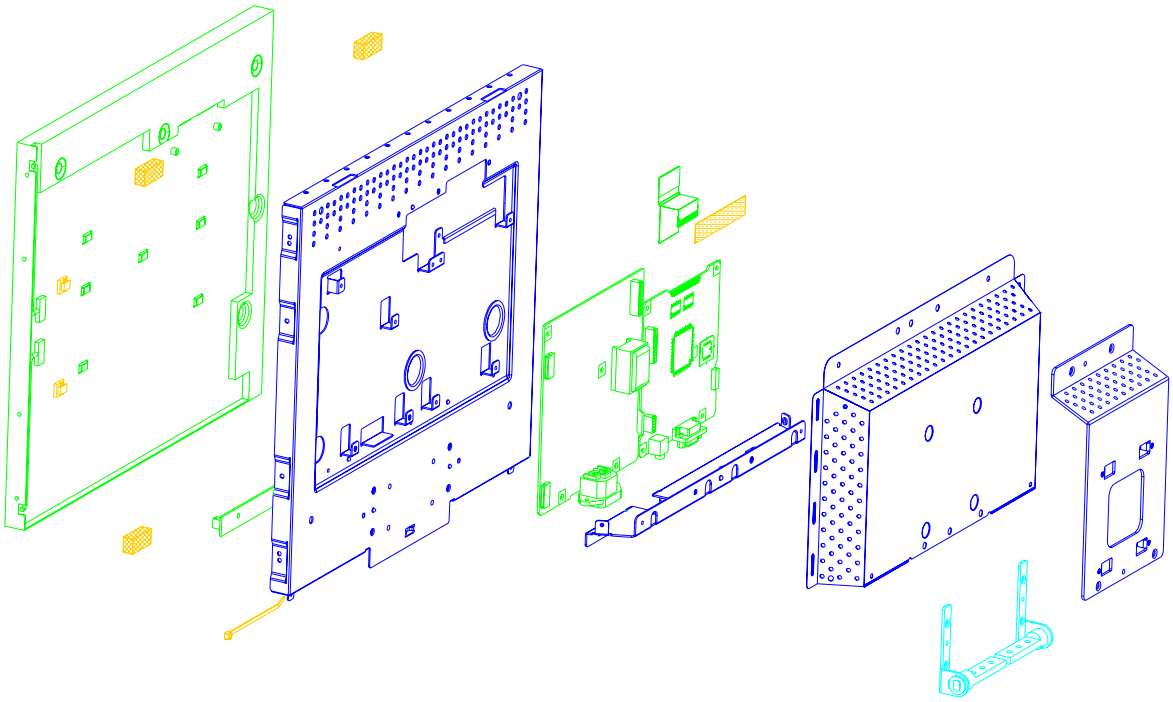

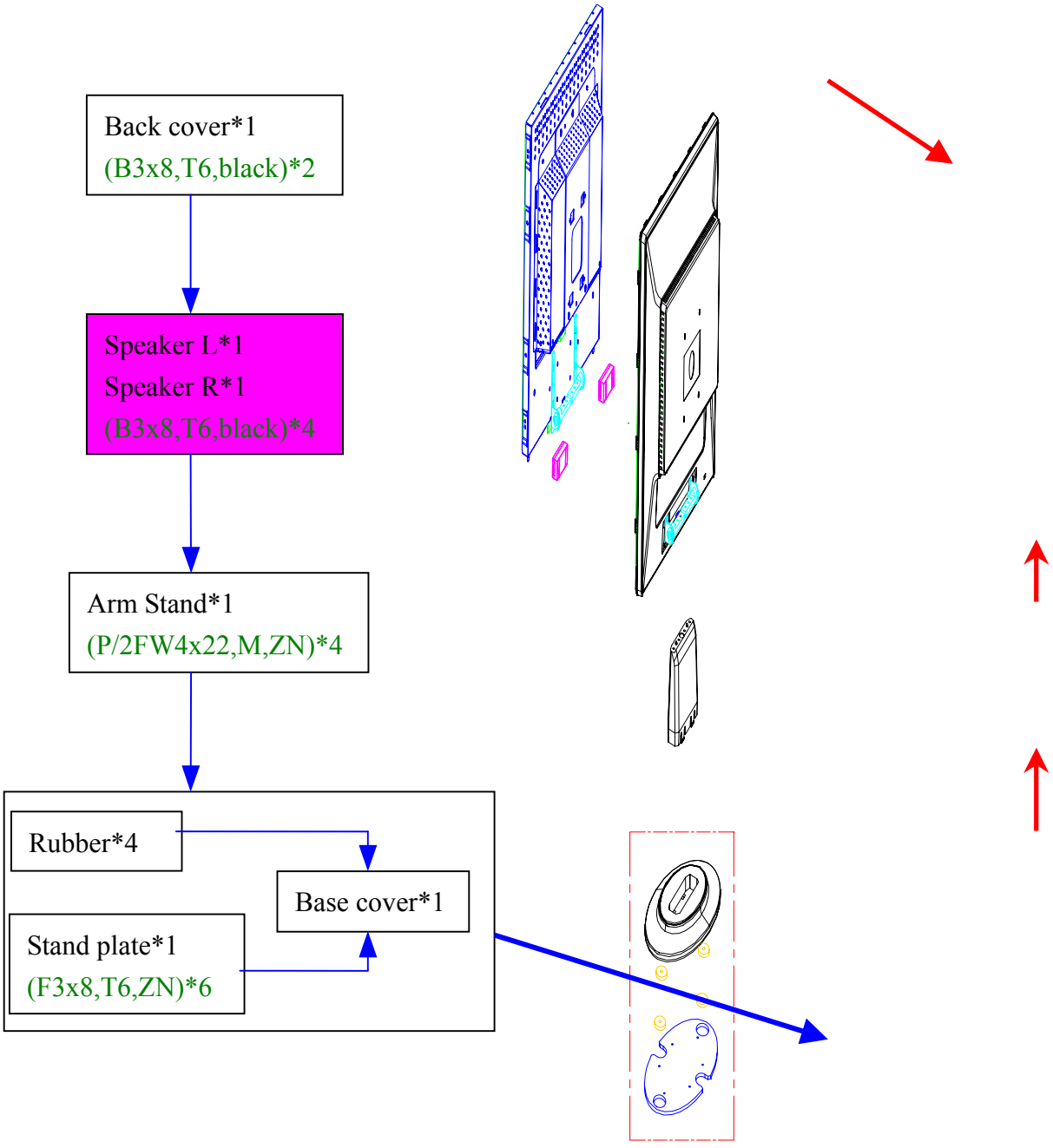
Back cover*1
(B3x8,T6,black)*2
Speaker L*1
Speaker R*1
(B3x8,T6,black)*4
Arm Stand*1
(P/2FW4x22,M,ZN)*4
Rubber*4
Base cover*1
Stand plate*1
(F3x8,T6,ZN)*6

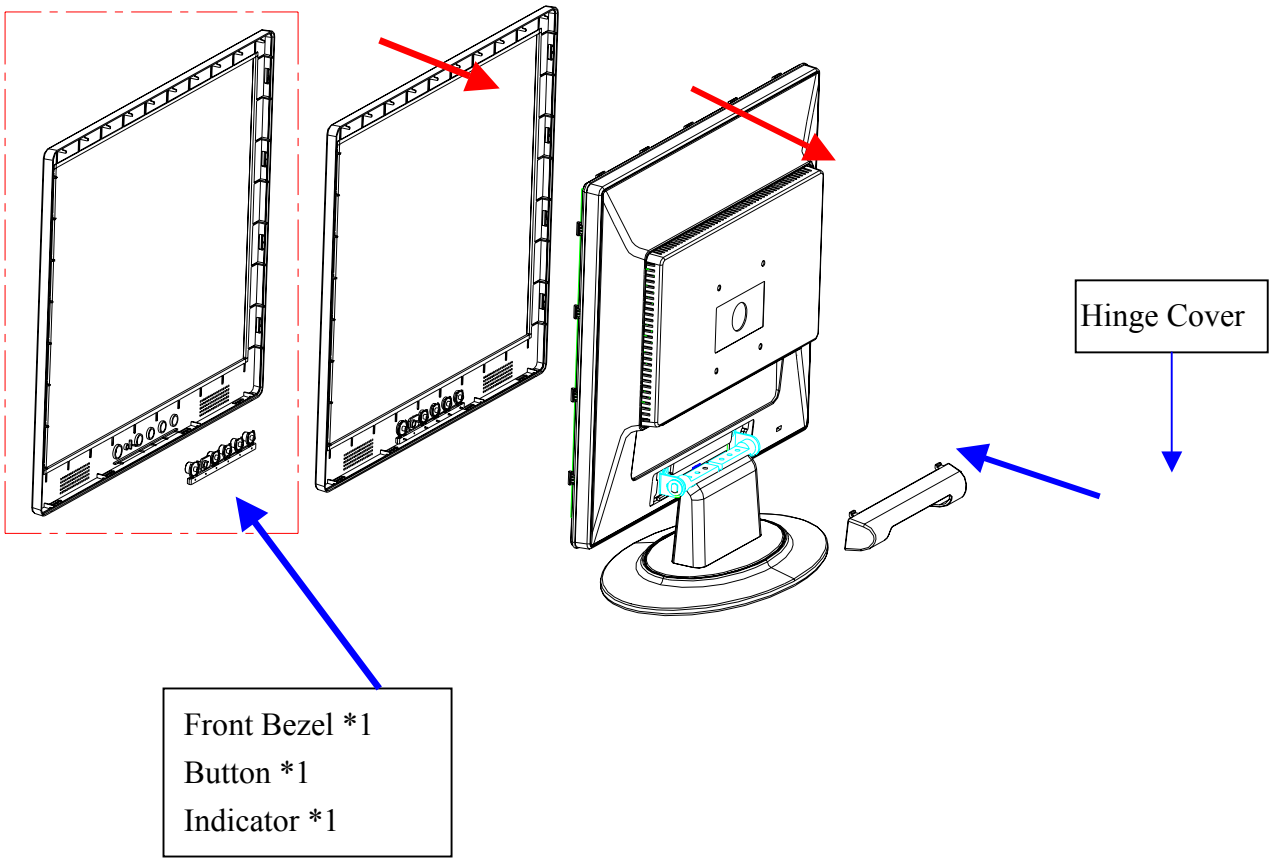
Hinge Cover
Front Bezel *1
Button *1
Indicator *1

Chapter 4

TROUBLESHOOTING

1. Common Acknowledge

If you change the M/B, Please re-do “DDC” programmed &”Auto Color balance”

If Replace “Power & Inverter board” only, please re-do “Auto color balance”.

If you adjust clock and phase, please do it at condition of Windows shut down pattern.

If you confirm the R.G.B. color is normal or not, please do it under 16-grey scalar pattern.

This LCM is analog interface. So if the entire screen is an abnormal color that means the problem happen in the analog circuit part, if only some scale appears abnormal color that stand the problem happen in the digital circuit part.

If you check the H/V position, please use the crosshatch pattern.

This LCM support 20 timing modes, if the input timing mode is out of specification, the picture appears abnormally.

“Auto Color Balance”- Press “>” and “<” together and plug in AC power cord at the same time at VGA cable in.

2. Interface Board Troubleshooting

2.1 No Power & Power LED Off

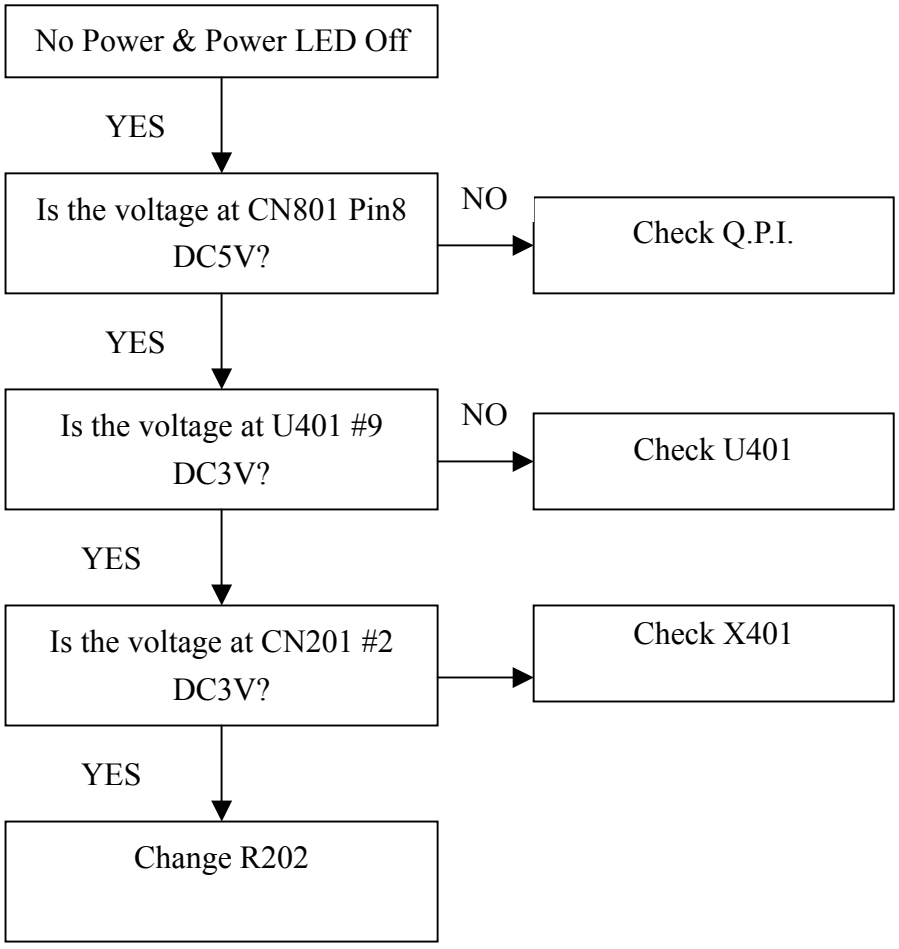

Power LED Amber

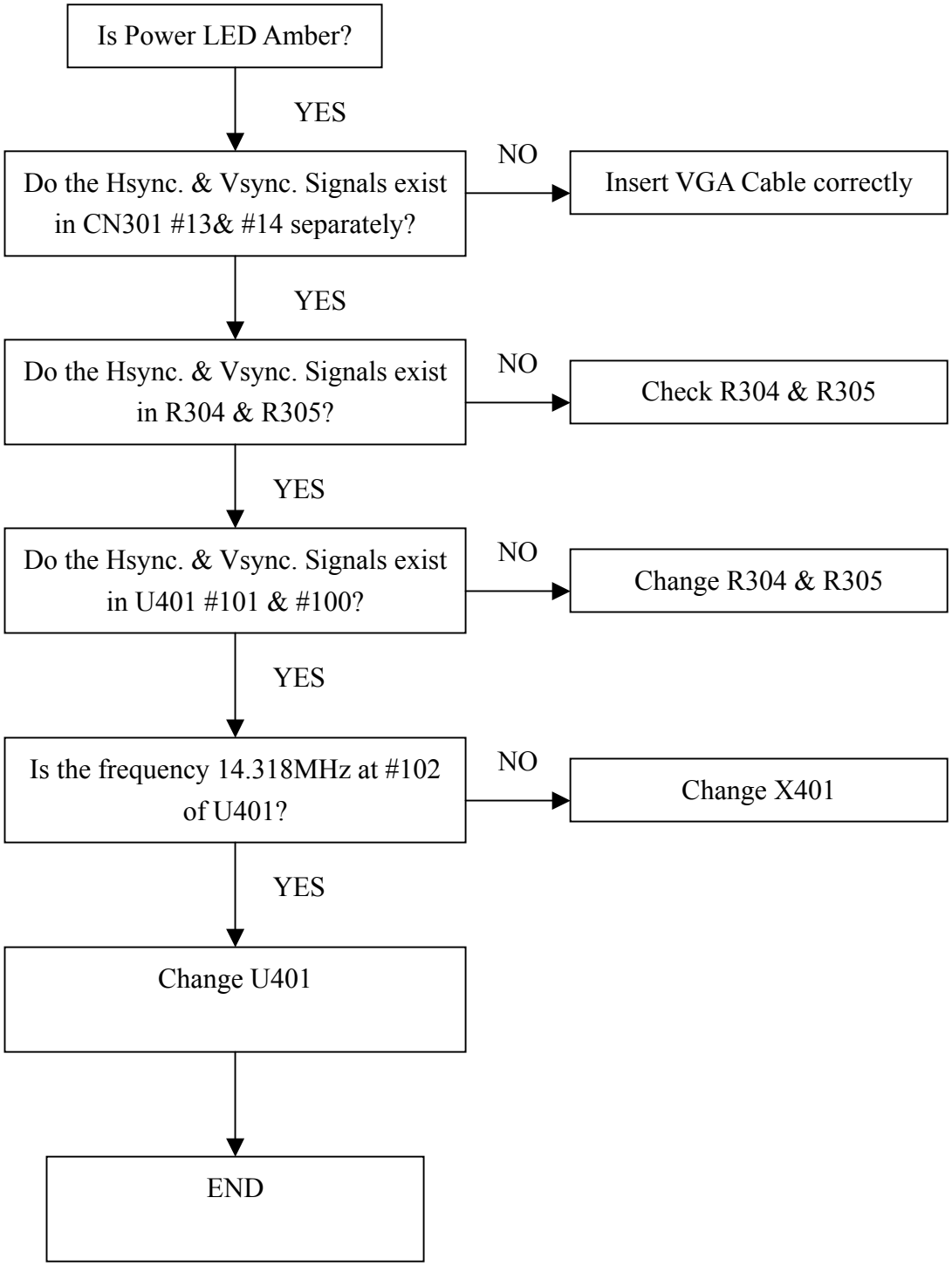

2.3 No picture & Backlight on

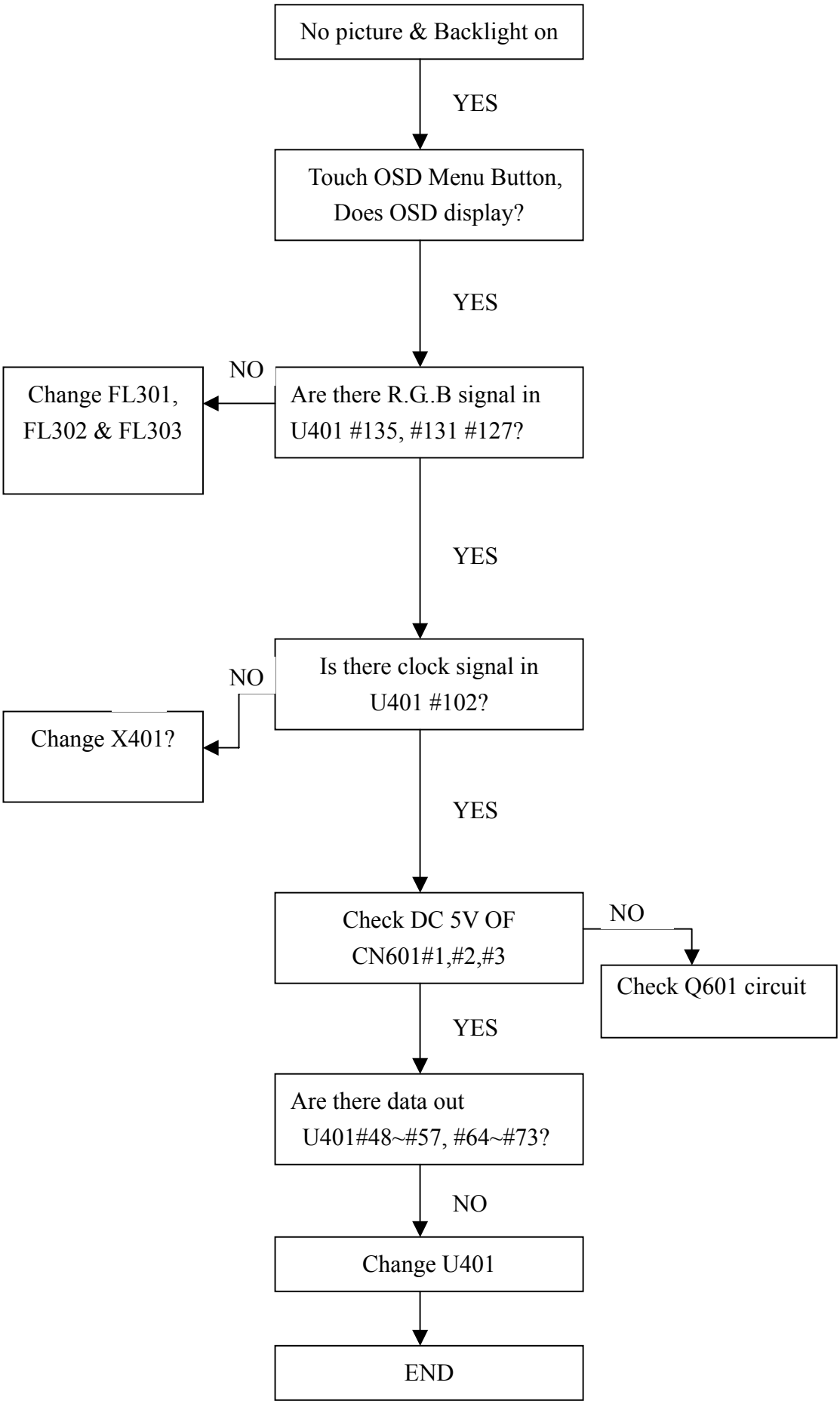

2.4 At 16-gray scale pattern, color lost in some scale

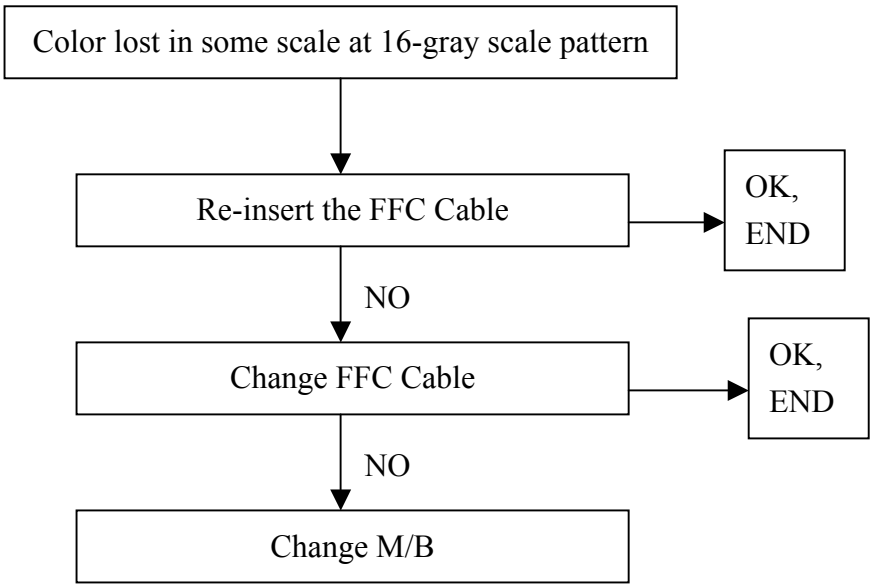

2.5 If brightness uniform, change Inverter or Panel.

2.6 If you find the vertical line on the screen, please change panel.

3. QPI PCBA Troubleshooting

3.1

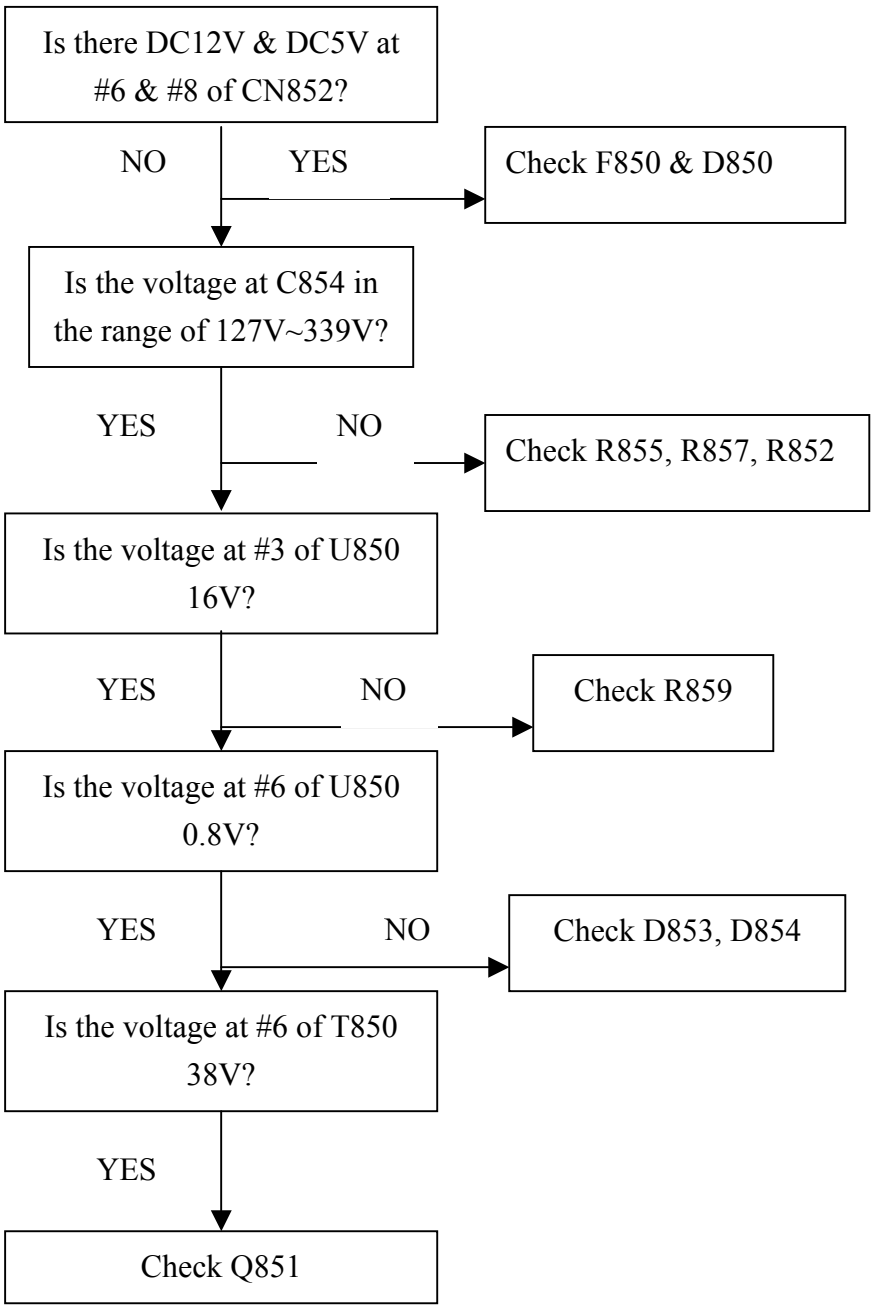

3.2 Backlight can’t be turned on

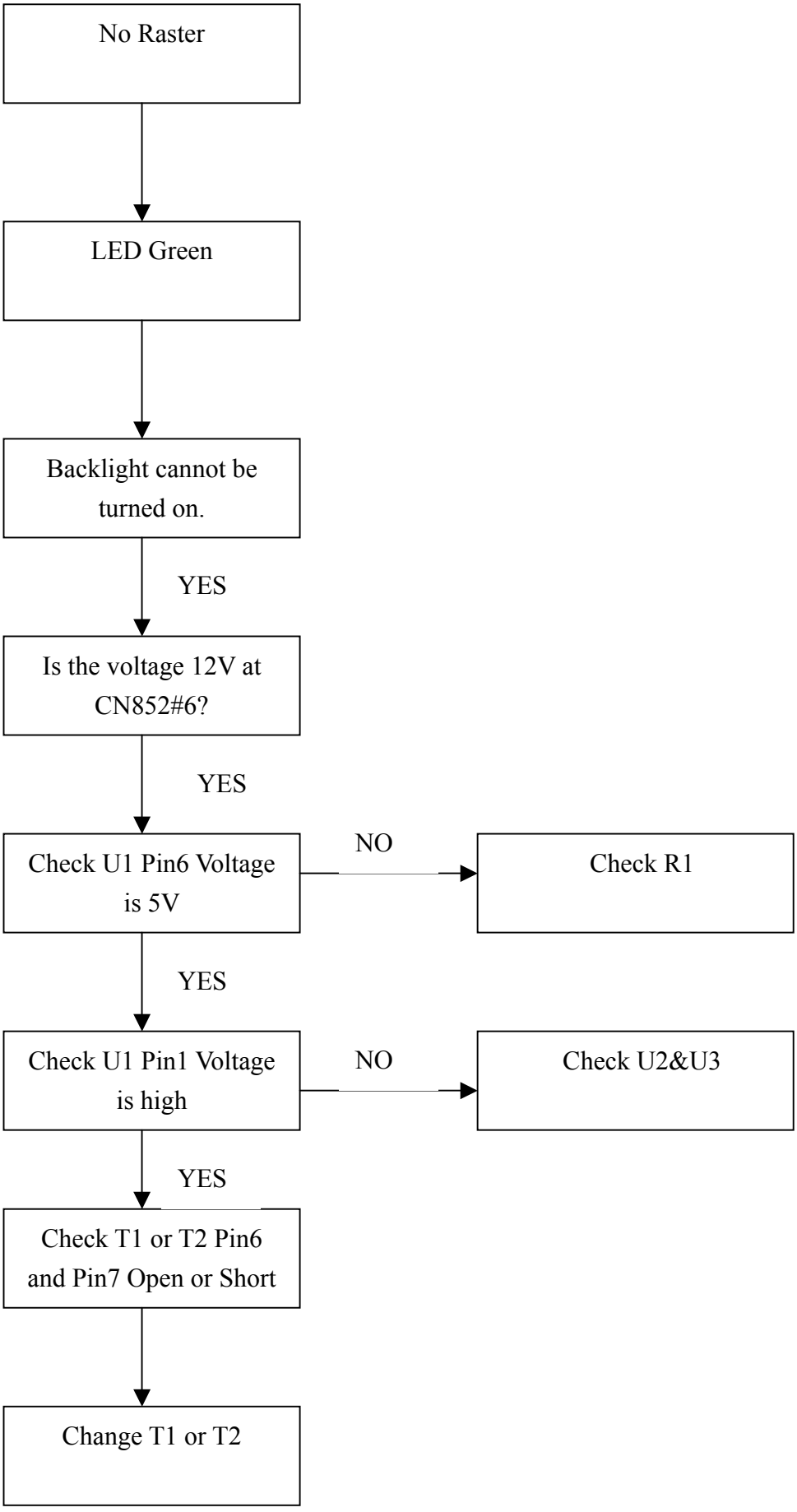

Chapter 5

CONNECTOR INFORMATION

VGA Connector (D-Sub 15pin) Pin Assignments

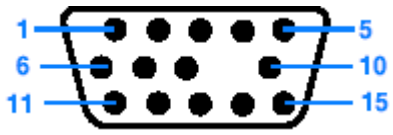

Pin	Symbol	Pin	Symbol	Pin	Symbol
1	Red	6	Red_GND	11	N.C.
2	Green	7	Green_GND	12	DDC_SDA
3	Blue	8	Blue_GND	13	HSYNC
4	N.C.	9	PC+5V	14	VSYNC
5	GND	10	N.C.	15	DDC_SCL

FRU (Field Replaceable Unit) LIST

Chapter 6

This chapter gives you the FRU (Field Replaceable Unit) listing in global configuration of AL1713. Refer to this chapter whenever ordering for parts to repair or for RMA (Return Merchandise Authorization).

NOTE: Please not WHEN ORDER FRU PARTS, that you should check the most up-to-date information available on your regional web or channel (http://aicsl.acer.com.tw/spl/). For whatever reasons a part number change is made, it will not be noted in the printed Service Guide. You MUST use the local FRU list provided by your regional Acer office to order FRU parts for repair and service of customer machines.

Note: To scrap or to return the defective parts. You should follow the local government ordinance or regulations on how best to dispose it, or follow the rules set by your regional Acer office on how to return it.

Exploded Diagram

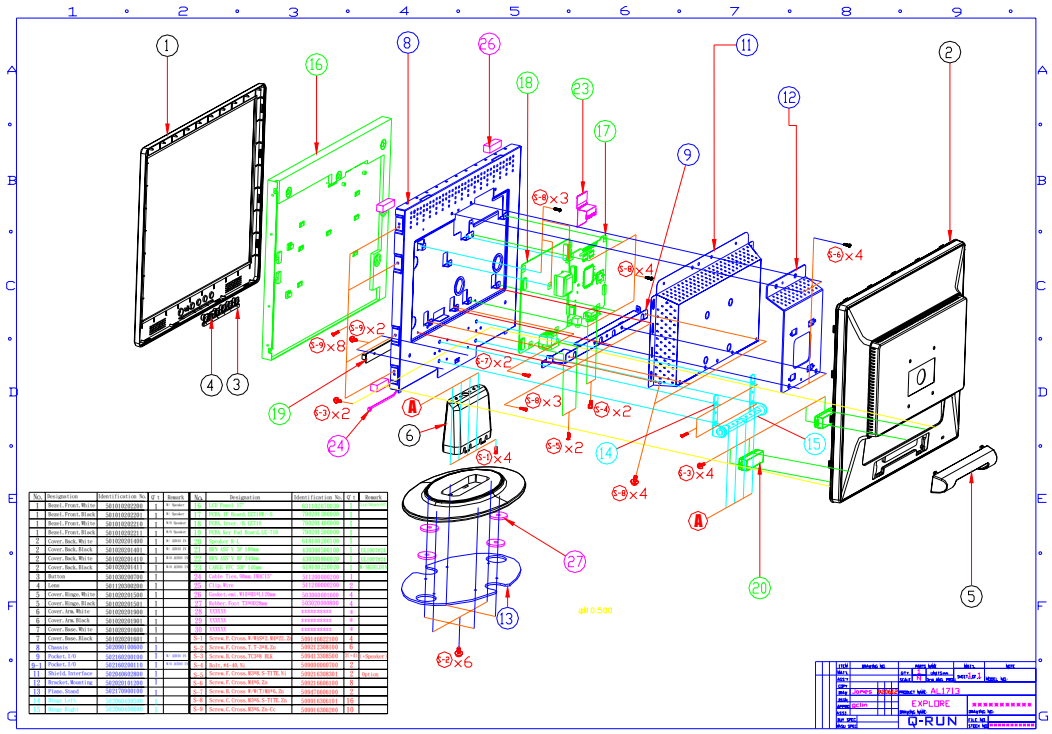

PART LIST

Picture	Part Name	Description	Vendor Part No.
	Front Bezel	White front bezel w/SPK White front bezel w/o SPK Black front bezel w SPK Black front bezel w/o SPK	501010202200 501010202210 501010202201 501010202211
	Button	Function Key ABS+PC	501030200700
	Indicator	LENS	501120300200
	Hinge Cover	Cover Hinge White Cover Hinge Black	501020201500 501020201501
	Base Cover	Cover Base White Cover Base Black	501020201600 501020201601
	Stand Plate	Plane stand	502170900100
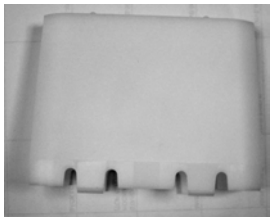	Arm Stand	Cover Arm stand white Cover Arm stand Black	501020201900 501020201901
	Speaker	Speaker 2W 4OHM P=40mm	618100200100
	Back Cover	Cover Back White w/SPK Cover Back White w/o SPK Cover Back Black w/SPK Cover Back Black w/o SPK	501020201400 501020201411 501020201401 501020201411
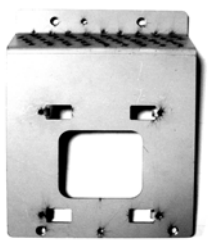	Mounting Bracket	Bracket Mounting	502020101200

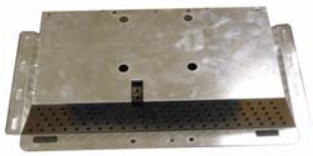	EMI Shield	Shield interface	502040602800
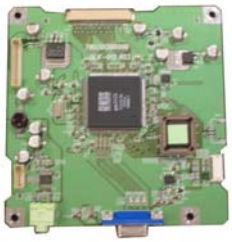	Interface Board	PCBA Interface board w/ audio PCBA Interface board w/o audio	790201300000
	POW/INV Board w/ 12pin wire	PCBA PWR/INV board	790201400000
	Keypad board	PCBA Control board w/SPK PCBA Control board w/o SPK	79020150000
	Out Port	Pocket I/O W/SPK Pocket I/O w/o SPK	502160200100 502160200110
	Panel	CLAA170EA02	631102070030
	FFC	FFC Cable Pitch 1mm 30P L=140mm	454040409010
	Cord Keep	CLIP WIRE	511100001300
	Gasket	10x4x20mm	503060001600
	Chassis	Chassis	502090100600
	Hinge L	Hinge Left	502060400500
	Hinge R	Hinge Right	502060400600
	HRN 5P 180mm	HRN ASS'Y 5P 180mm UL1007#24	430300500100

	HRN 8P 240mm	HRN ASS'Y 8P 240mm UL1007#24	430300800020
	Base Screw	Screw F Cross T-3*8 Zn	509212308100
	Inverter Board Screw (Small)	Screw C Cross M3*6 S-TITE Zn	509916306101
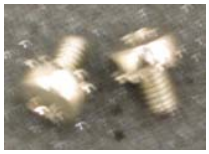	Inverter Board Screw (Big)	Screw B Cross M4*6 Zn	509476606100
	Interface Board Screw	Screw C Cross M3*6 S-TITE Zn	509916306101

Chapter 7

SHEMATIC DIAGRAM

Keypad Diagram

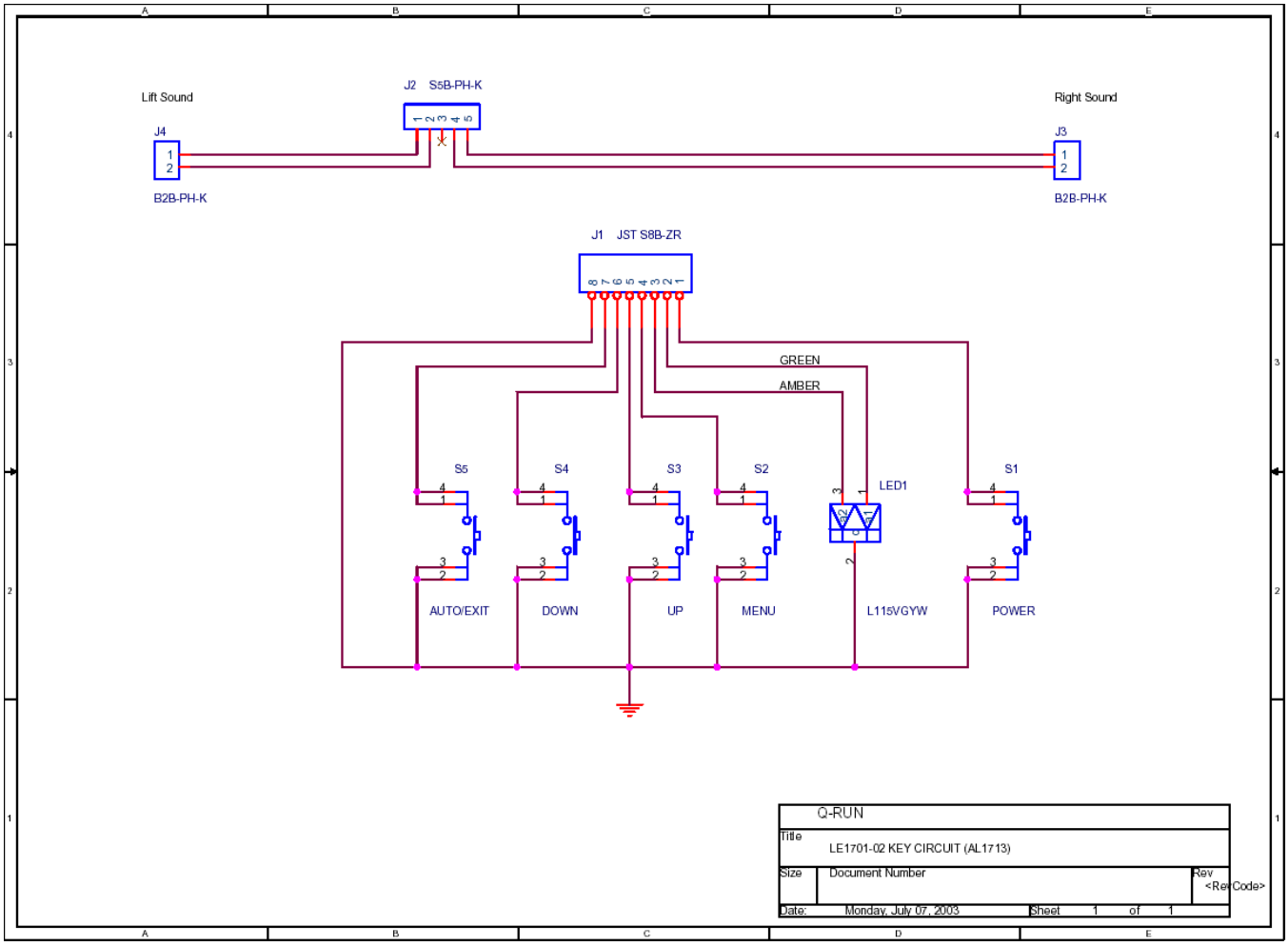

Interface Board Schematic

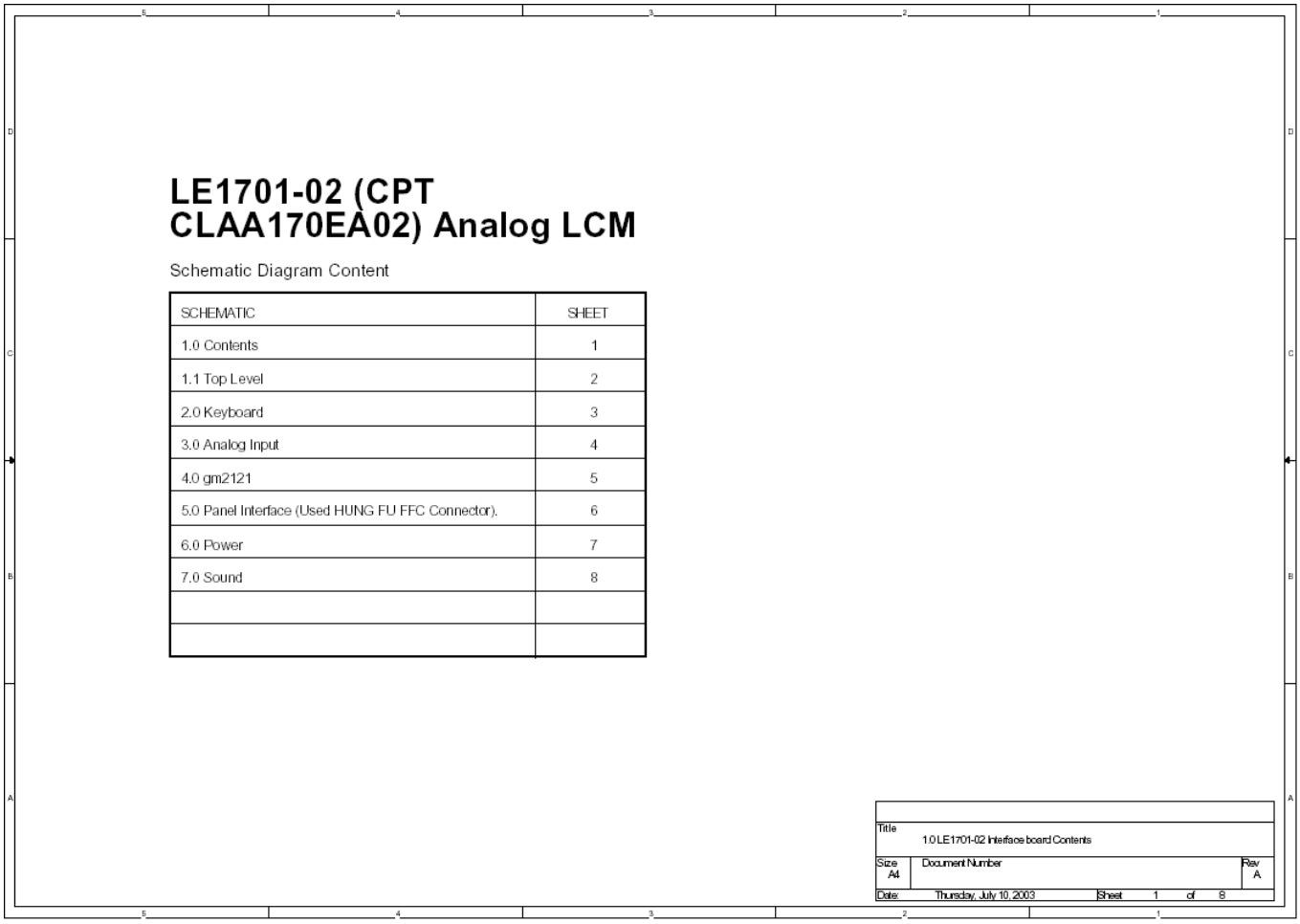

LE1701-02 (CPT CLAA170EA02) Analog LCM

Schematic Diagram Content

SCHEMATIC	SHEET
1.0 Contents	1
1.1 Top Level	2
2.0 Keyboard	3
3.0 Analog Input	4
4.0 gm2121	5
5.0 Panel Interface (Used HUNG FU FFC Connector).	6
6.0 Power	7
7.0 Sound	8

Title	1.0 LE1701-02 Interface board Contents	
Size A4	Document Number	Rev A
Date: Thursday, July 10, 2003	Sheet 1 of 8	

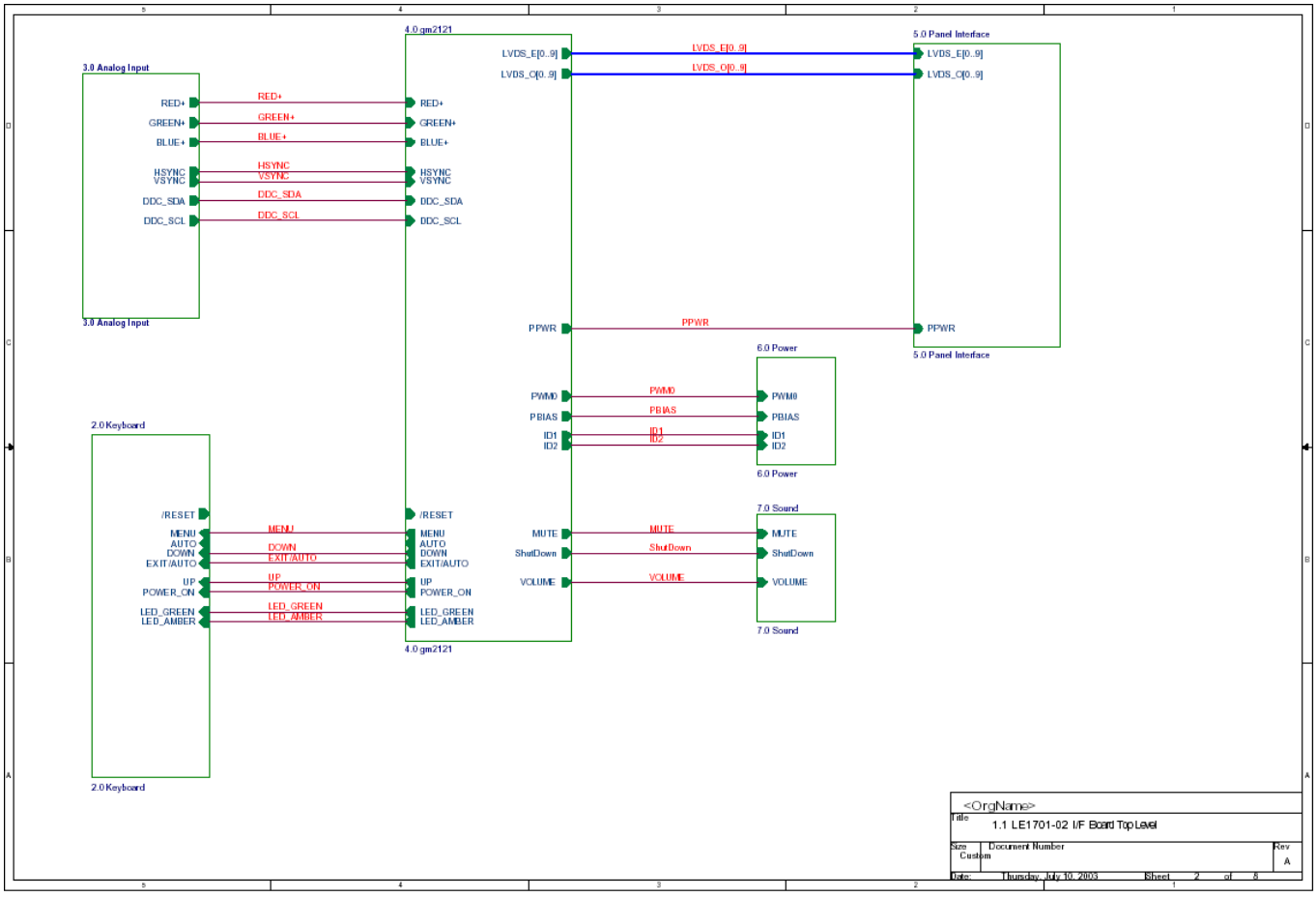
4.0 gm2121
3.0 Analog Input
RED+
GREEN+
BLUE+
HSYNC
VSYNC
DDC_SDA
DDC_SCL
LVDS_E[0..9]
LVDS_O[0..9]
5.0 Panel Interface
PPWR
6.0 Power
PWM0
PBIAS
ID1
ID2
2.0 Keyboard
/RESET
MENU
AUTO
DOWN
EXIT/AUTO
UP
POWER_ON
LED_GREEN
LED_AMBER
MUTE
ShutDown
VOLUME
7.0 Sound
<OrgName>
1.1 LE1701-02 I/F Board Top Level
Custom
Thursday, July 10, 2003
Sheet 2 of 8

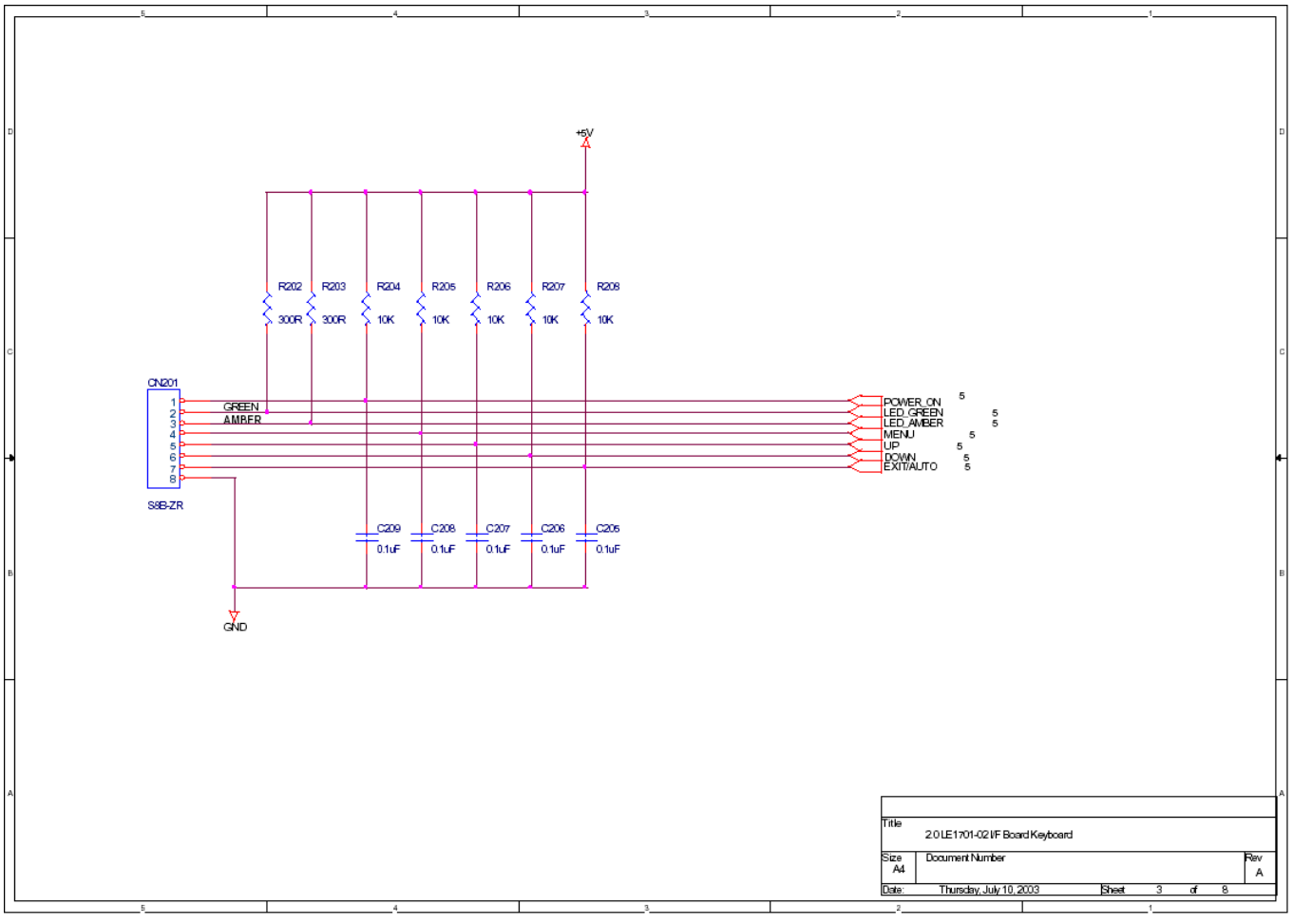
+5V
R202 300R
R203 300R
R204 10K
R205 10K
R206 10K
R207 10K
R208 10K
CN201
S8B-ZR
GREEN
AMBER
POWER_ON
LED_GREEN
LED_AMBER
MENU
UP
DOWN
EXIT/AUTO
C209 0.1uF
C208 0.1uF
C207 0.1uF
C206 0.1uF
C205 0.1uF
GND
2.0 LE1701-02 I/F Board Keyboard
A4
Thursday, July 10, 2003
Sheet 3 of 8

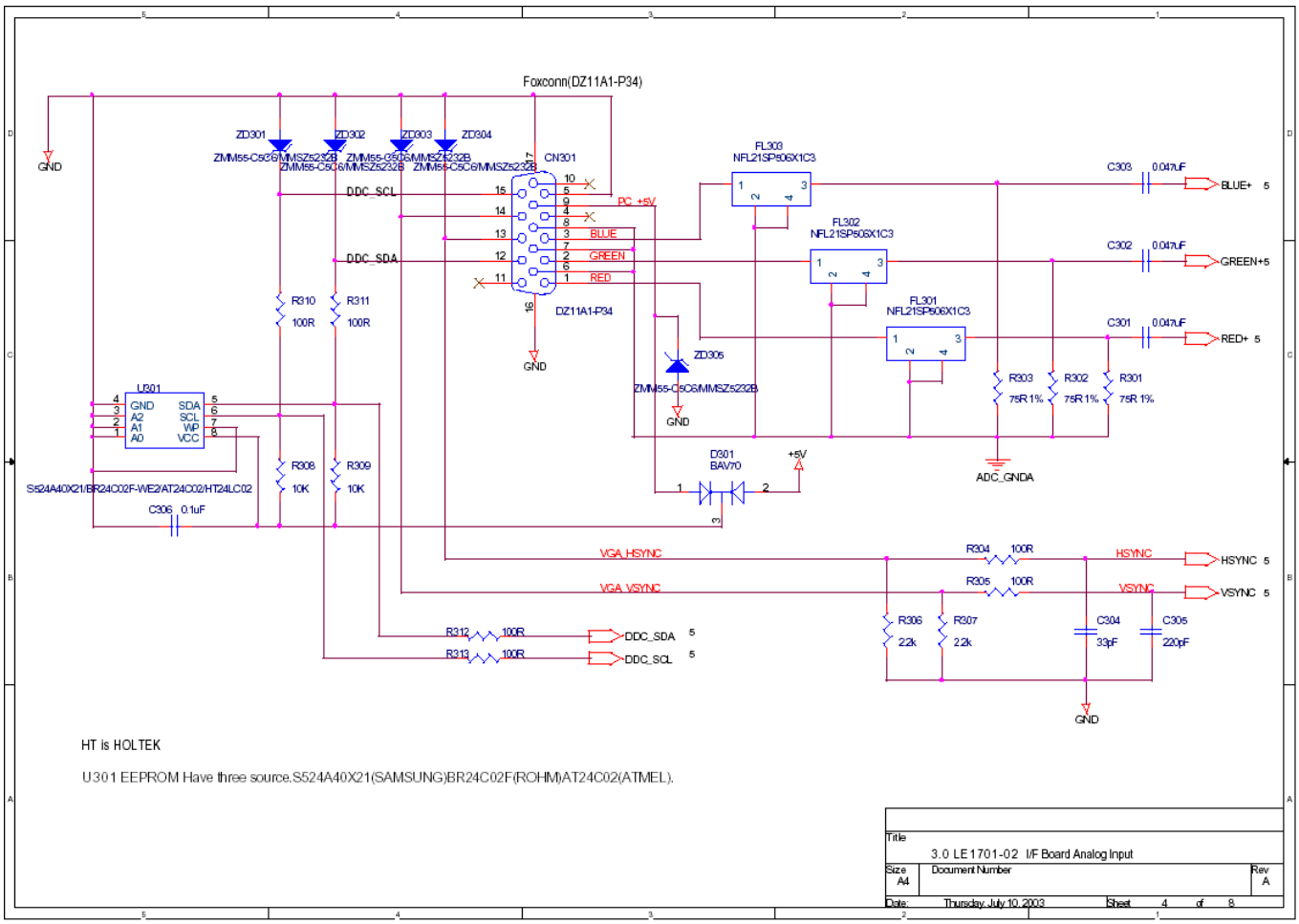
Foxconn(DZ11A1-P34)
GND
ZD301
ZD302
ZD303
ZD304
ZMM55-C5C6/MMSZ5232B
CN301
DDC_SCL
DDC_SDA
PC +5V
BLUE
GREEN
RED
DZ11A1-P34
R310
R311
100R
U301
GND
A2
A1
A0
SDA
SCL
WP
VCC
S524A40X21/BR24C02F-WE2/AT24C02/HT24LC02
R308
R309
10K
C306 0.1uF
FL303
NFL21SP506X1C3
FL302
NFL21SP506X1C3
FL301
NFL21SP506X1C3
C303 0.047uF
C302 0.047uF
C301 0.047uF
BLUE+ 5
GREEN+5
RED+ 5
ZD305
ZMM55-C5C6/MMSZ5232B
D301
BAV70
+5V
R303 75R 1%
R302 75R 1%
R301 75R 1%
ADC_GNDA
VGA_HSYNC
VGA_VSYNC
R304 100R
R305 100R
HSYNC
VSYNC
HSYNC 5
VSYNC 5
R306 2.2k
R307 2.2k
C304 33pF
C305 220pF
R312 100R
R313 100R
DDC_SDA 5
DDC_SCL 5
HT is HOLTEK
U301 EEPROM Have three source.S524A40X21(SAMSUNG)BR24C02F(ROHM)AT24C02(ATMEL).
Title
3.0 LE1701-02 I/F Board Analog Input
Size A4
Document Number
Rev A
Date: Thursday, July 10, 2003
Sheet 4 of 8

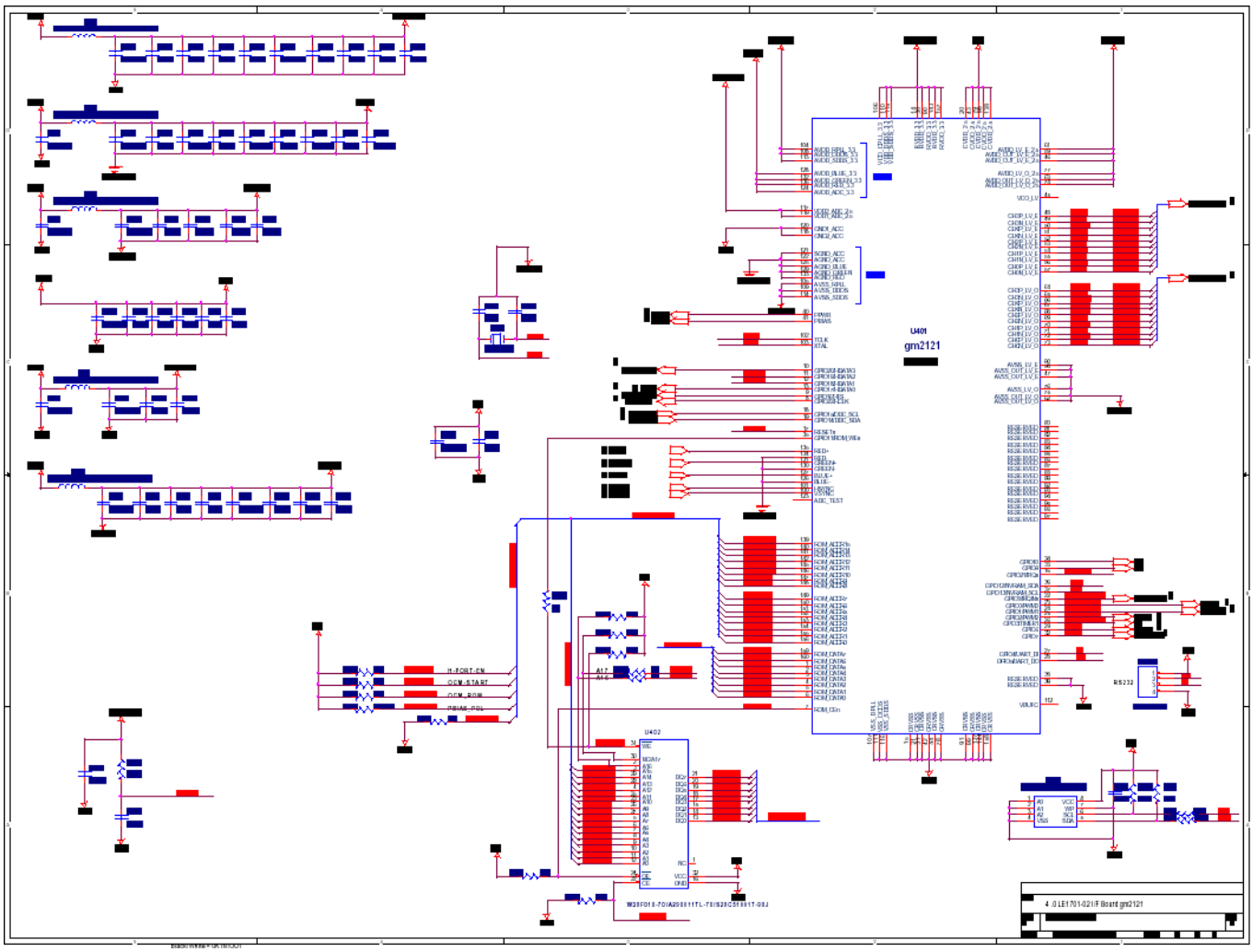
U401
gm2121
U402
RS232
H-PORT-EN
OEM-START
OEM_RDW
PBIAS-PDL
4.0LE1701-021/F Board gm2121

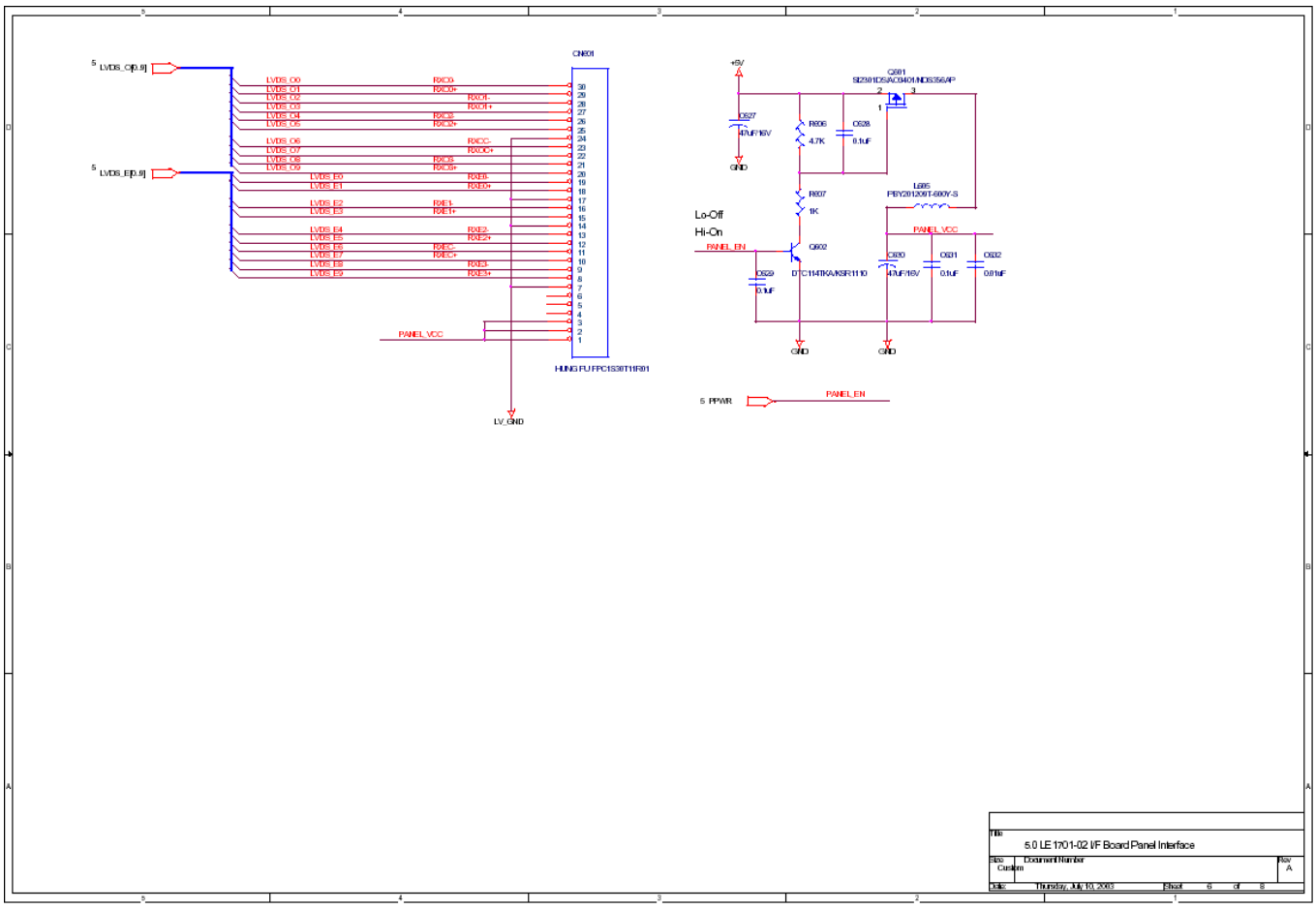
CN801
HUNG FU FPC1S30T11R01
LV_GND
PANEL_VCC
Lo-Off
Hi-On
PANEL_EN
Q601
Q602
L605
PBY201209T-600Y-S
5 PPWR
Title
5.0 LE1701-02 I/F Board Panel Interface
Size
Custom
Document Number
Rev
A
Date: Thursday, July 10, 2003
Sheet 6 of 8

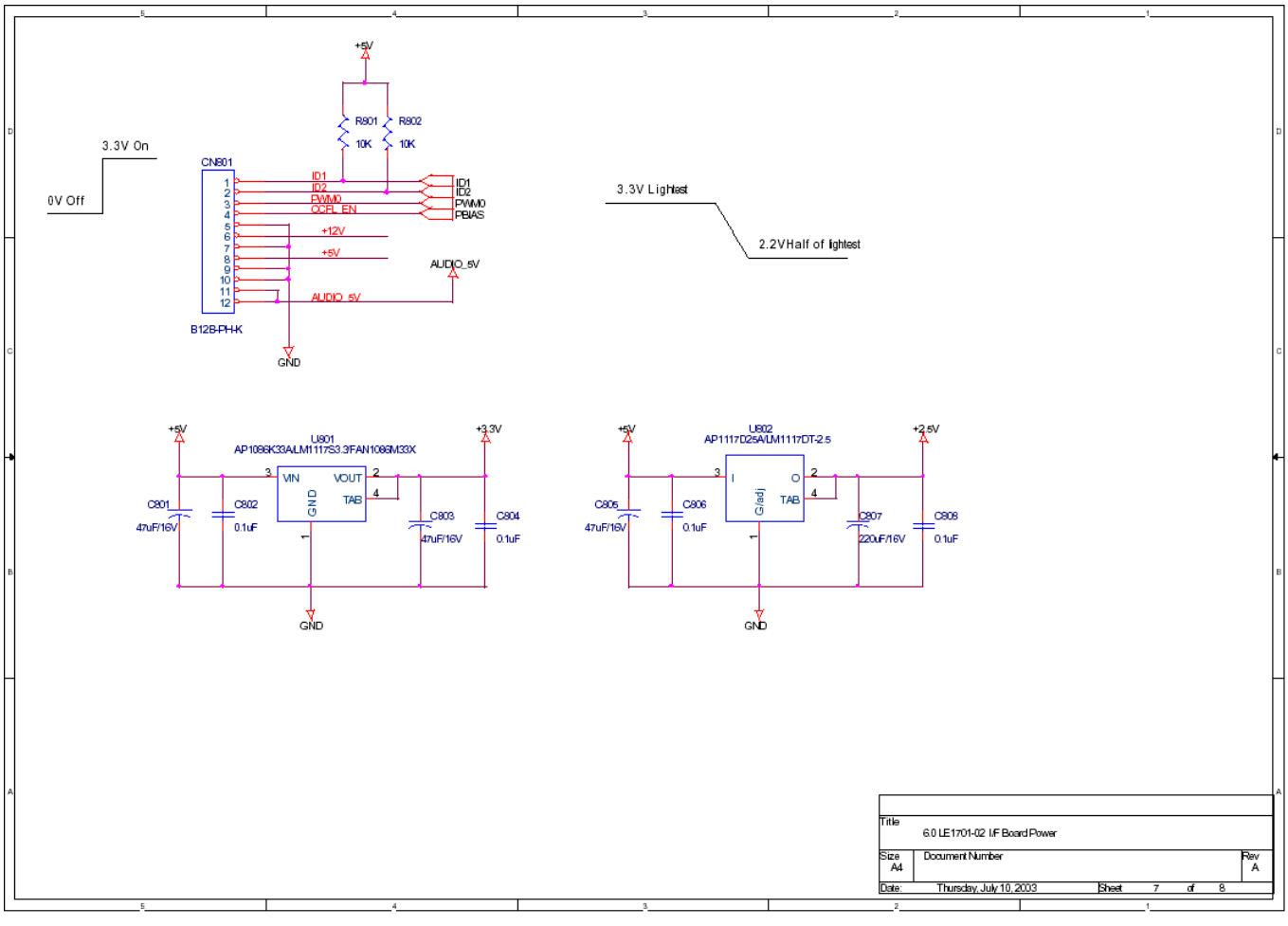
+5V
R801
10K
R802
10K
3.3V On
0V Off
CN801
ID1
ID2
PWM0
OCFL_EN
PBIAS
+12V
+5V
AUDIO_5V
B12B-PH-K
GND
3.3V Lightest
2.2V Half of lightest
U801
AP1086K33A/LM1117S3.3/FAN1086M33X
VIN
VOUT
TAB
GND
+3.3V
C801
47uF/16V
C802
0.1uF
C803
47uF/16V
C804
0.1uF
U802
AP1117D25A/LM1117DT-2.5
I
O
G/adj
TAB
+2.5V
C805
47uF/16V
C806
0.1uF
C807
220uF/16V
C808
0.1uF
Title
6.0 LE1701-02 I/F Board Power
Size
A4
Document Number
Rev
A
Date: Thursday, July 10, 2003
Sheet 7 of 8

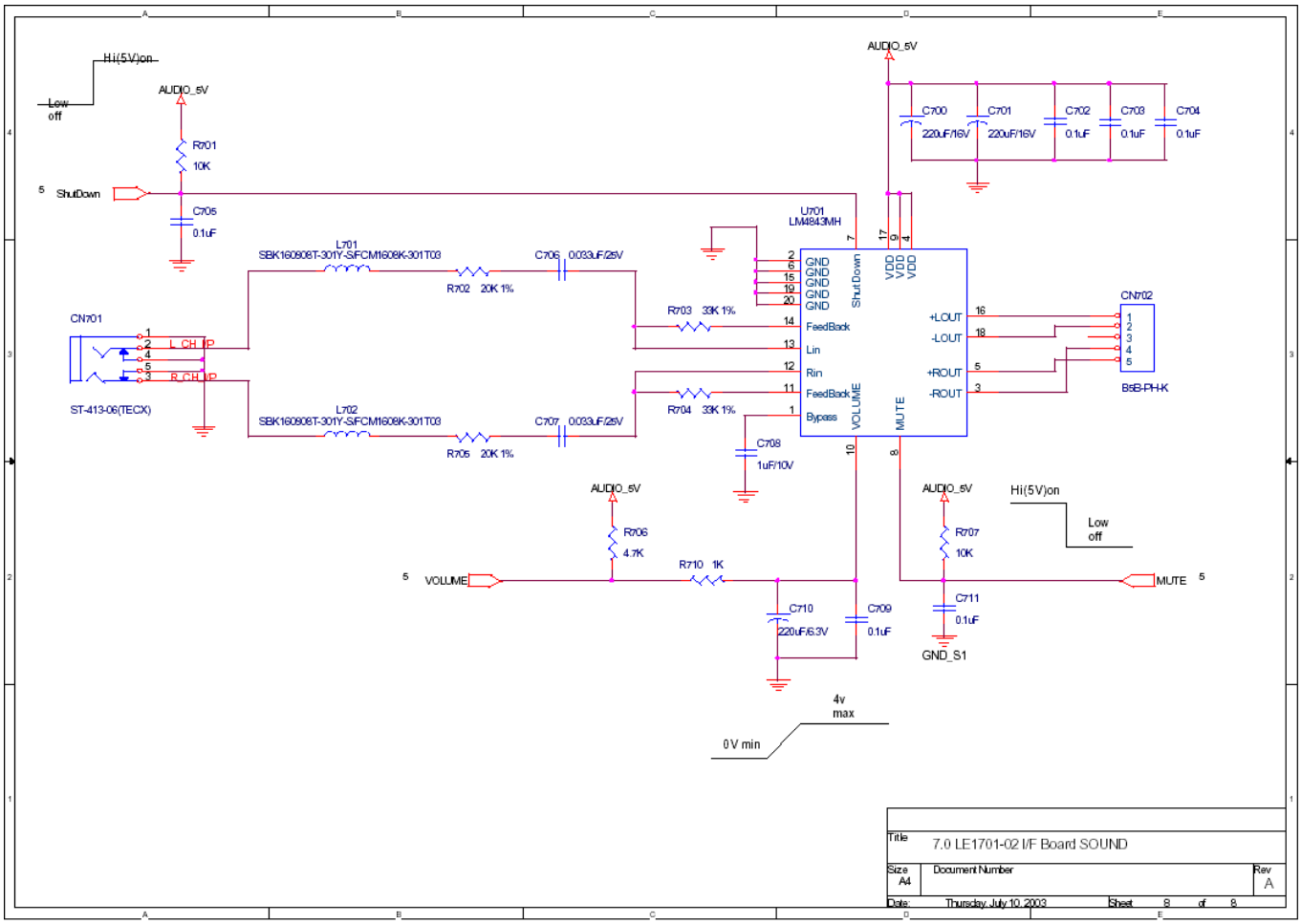
Hi(5V)on
Low
off
AUDIO_5V
R701
10K
ShutDown
C705
0.1uF
L701
SBK160808T-301Y-S/FCM1608K-301T03
C706 0.033uF/25V
R702 20K 1%
CN701
L_CH_IP
R_CH_IP
ST-413-06(TECX)
L702
SBK160808T-301Y-S/FCM1608K-301T03
C707 0.033uF/25V
R705 20K 1%
U701
LM4843MH
GND
ShutDown
VDD
FeedBack
Lin
Rin
Bypass
VOLUME
MUTE
+LOUT
-LOUT
+ROUT
-ROUT
R703 33K 1%
R704 33K 1%
C708
1uF/10V
CN702
B5B-PH-K
C700
220uF/16V
C701
220uF/16V
C702
0.1uF
C703
0.1uF
C704
0.1uF
R706
4.7K
R710 1K
VOLUME
C710
220uF/6.3V
C709
0.1uF
R707
10K
MUTE
C711
0.1uF
GND_S1
4v
max
0V min
Title
7.0 LE1701-02 I/F Board SOUND
Size
A4
Document Number
Rev
A
Date:
Thursday, July 10, 2003
Sheet
8
of
8

POW/INV Board Schematic

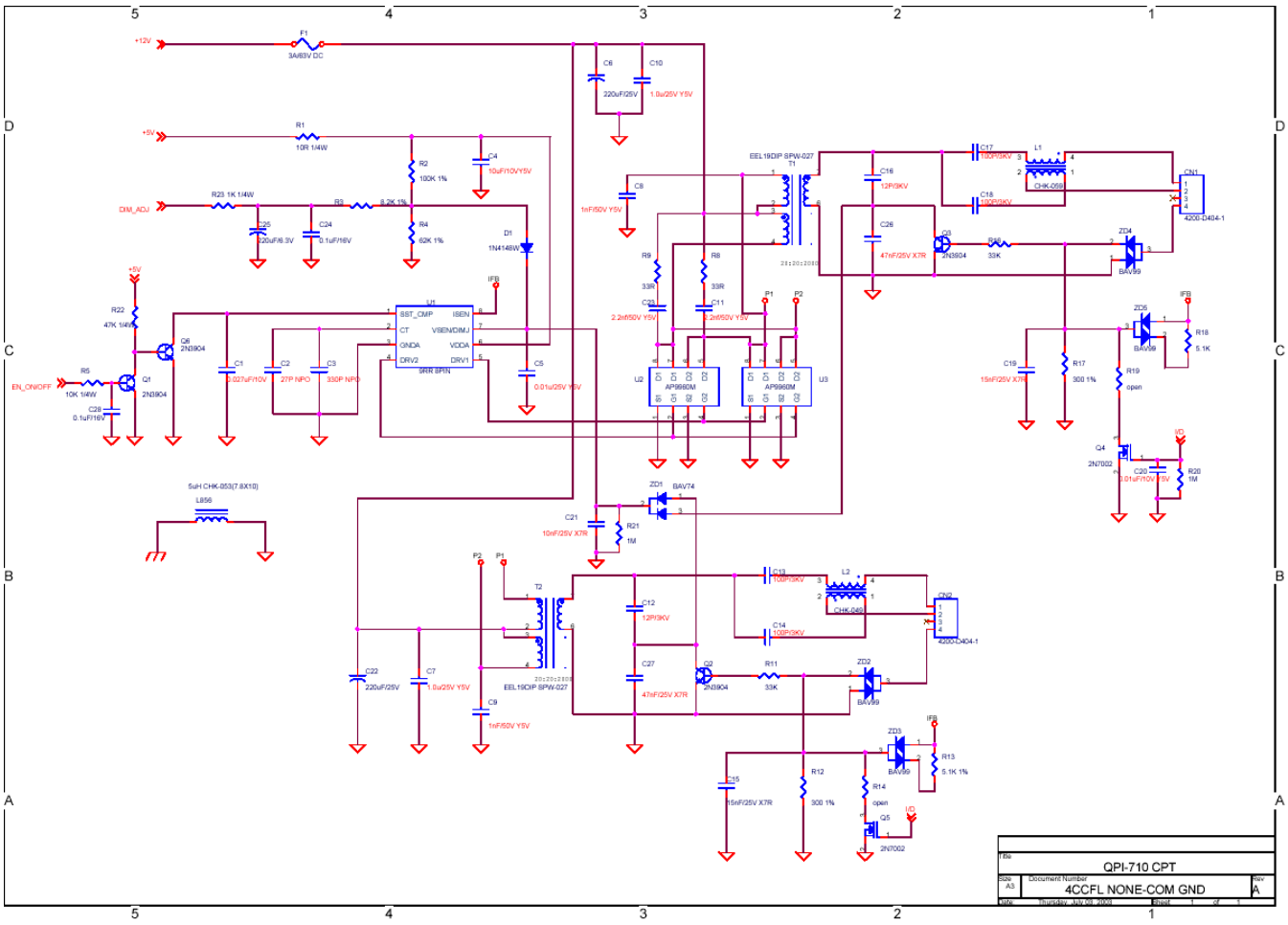

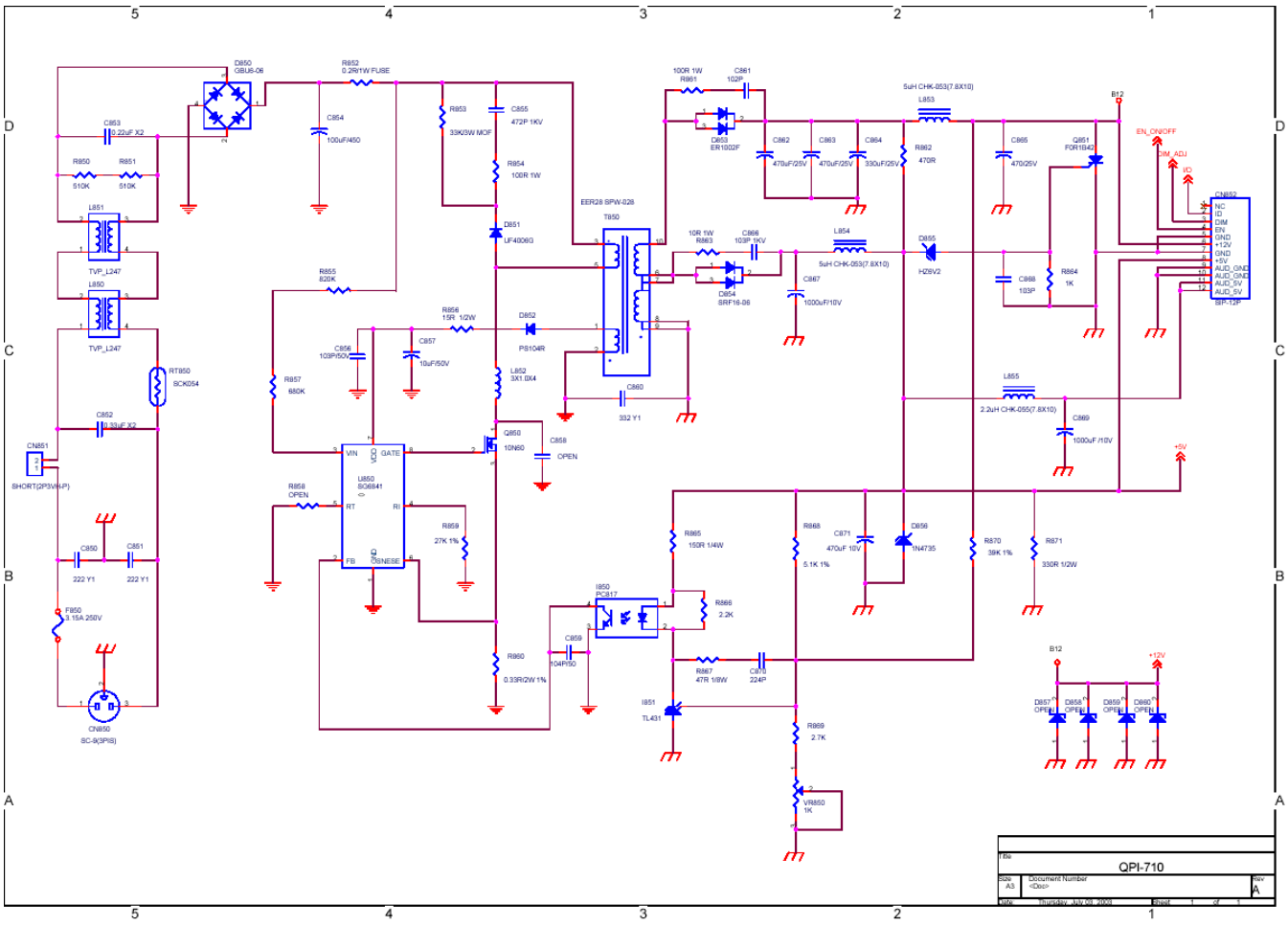
QPI-710
Thursday, July 03, 2008